Enriching Lives

SERVICE

KIRLOSKAR OIL ENGINES LIMITED

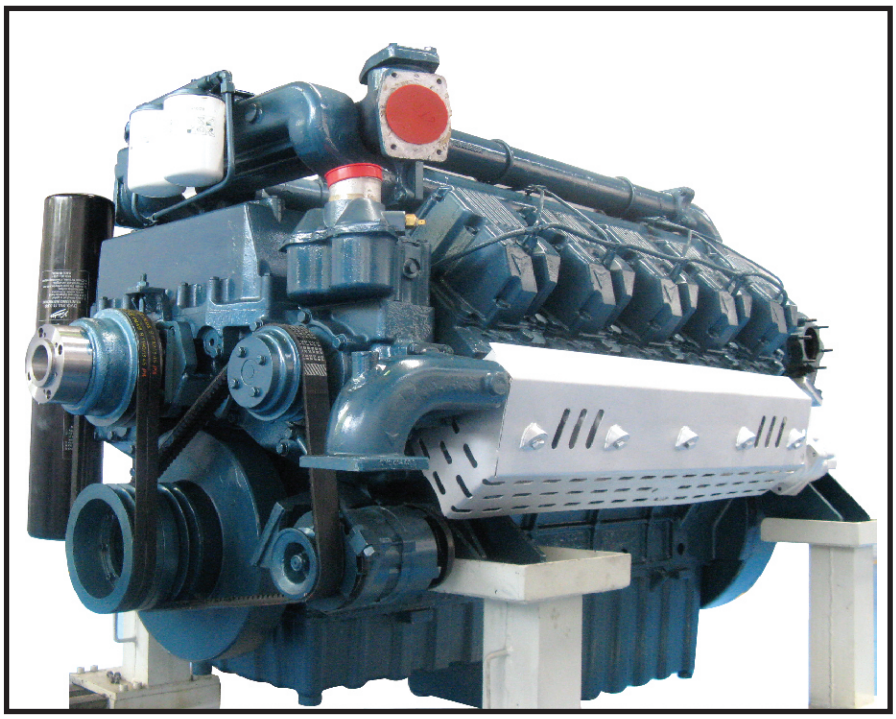

O & M MANUAL FOR DV SERIES ENGINES

KIRLOSKAR GREEN POWER IDEAS

INDEX

FOREWORD

Dear Customer.

We are glad to welcome you to the family of **KIRLOSKAR GENSET OWNERS.**

As you are aware, Kirloskar products are based on the strong foundation of long experience in Research & Manufacturing of Diesel Genset for power generation. Kirloskar products have been accepted by customers the world over for their reliability, low running costs and simplicity in maintenance. Prompt after sales service through countrywide network of Dealers and Distributors is one of the plus in buying Kirloskar products.

This manual has been prepared to help you use and operate the **DV Series** diesel engine in a safe and correct manner.

The maximum performance of the engine largely depends on its proper maintenance and upkeep. We strongly urge you to thoroughly read this manual and to acquaint yourself fully with all the information contained in this manual.

We recommend that only trained staff should be permitted to perform the operating and maintenance task. Always use genuine **KIRLOSKAR SPARE PARTS.**

In addition to the publication of this manual, we maintain facilities for training operators and owners in the maintenance of **KIRLOSKAR GENSET.** You can avail yourself of these facilities by contacting our nearest authorised Distributor / Dealer.

Thanking you, and congratulating you for choosing this model, we wish you to be proud owner of **KIRLOSKAR ENGINES** for many years to come.

In case of any difficulty, please contact -

KIRLOSKAR OIL ENGINES LTD

Customer Support
Laxmanrao Kirloskar Road, Khadki
Pune 411 003 (INDIA)
Help Desk – 1800 2333344, 020-66084608
Help Desk ID – helpdesk@koel.co.in
Visit us at : www.kirloskar.com

1. WARRANTY

This warranty is applicable to KOEL DV - Series Engines for 36 months from date of despatch from our Pune factory or from 24 months from the date of commissioning or 5000 hrs of operation whichever is earlier subject to use of K-Oil Super, K Cool Super Plus Coolant and Kirloskar filters sourced through KOEL authorised service dealer.

Kirloskar Oil Engines Ltd. hereby warrants that this engine manufactured by us is free from defects in material, design, and workmanship.

This warranty shall be limited for repair and replacement under normal use, regular check up and maintenance of the engine as per our maintenance schedule and purchase and servicing of the engine through our authorised dealer.

This warranty is the only document given by us warranting the engine. No other document giving any warranty terms conflicting these contents shall be considered and entertained.

Kirloskar Oil Engines Ltd. is not liable to service, or repair of engine free of costs during the warranty period, for the engines purchased from person other than an authorised person of Kirloskar Oil Engines Ltd.

This warranty does not include the engine removal and reinstallation charges.

Kirloskar Oil Engines Ltd. is not liable for any loss or damage, direct or consequential, labour charges or the effect or any accident resulting from defective material, faulty workmanship or otherwise. In any case the liability of Kirloskar Oil Engines Ltd. will not exceed the engine price or the market value of the Engine whichever is lower, and shall be without interest.

Warranty Coverage on Engine Accessories:

Where problems of warranty nature are experienced with engine accessories, they are rectified by the Company / by the KOEL Distributor or by KOEL Dealer on behalf of the manufacturer. However, the warranty coverage will be the same as offered by the individual accessory manufacturer.

KOEL will not be responsible for warranty replacement of electrical Components, hoses, belts, instruments and gauges beyond 1000 hours or 6 months of engine operation, whichever is earlier.

This warranty does not apply for the following:

1. The engine's failure due to misuse, including improper shutdown, improper handing and adjustments, negligence, over speeding, alteration of specification, and due to accident or Act. of God.
2. Engine if not maintained as per the maintenance schedule given by Kirloskar Oil Engines Ltd.
3. Damage due to improper installment of the parts, components and accessories.
4. For the parts supplied under warranty or voluntarily or at special rates or free of charge, the warranty will be applicable only to the unexpired portion of machines warranty.
5. Damage due to use of improper lubricant or the lubricant used other than suggested by Kirloskar Oil Engines Ltd.
6. Normal wear and tear of engine.
7. For resale of engine or the engine purchased is second hand. Any claim or obligation in connection with the sale or performance of Engine shall be subject to Pune Jurisdiction

Conditions precedent to Engine Warranty

1. The engine warranty given by the company is subject to the below condition which are to be observed by every purchaser/user of engine, without which the warranty claims if any will be rejected.
2. Proper installation of the engine is the sole responsibility of the owner of the engine/purchaser of the engine.
3. Carrying Free Service Checks as per the scheduled Service Checks.
4. Preventive Maintenance as recommended by the company (Ref Maintenance Manual / Chart)
5. Any defective part claimed, to be returned to the company if such part is replaced by the company under warranty, the returned part becomes the property of the company. The transportation charges to be paid by the customer.
6. In case of interchange of part between engines shall void the warranty.

SERVICE CHECKS :

Kirloskar Oil Engines Limited offers Nine Free Service checks to DV series Genset.

K1 - Joint commissioning check

K2 - Service check at first 50 hrs or three months whichever is earlier

K3 to K9 - Service check at every 500 hrs or three months whichever is earlier.

Engine Type :

Engine serial no. :

Date of commissioning. :

Enriching Lives

KIRLOSKAR OIL ENGINES LIMITED

Environmental, Occupational Health & Safety (EHS) Policy

We, at Kirloskar Oil Engines Limited (KOEL), are engaged in manufacturing of I.C.Engines, Generating Sets, Pump Sets and Engine Bearings. We strongly believe that, it is the duty of everyone working in KOEL to implement this policy in his area of activities.

We commit to :

- **Comply with all applicable EHS legislations and other requirements.**
- **Prevent environmental pollution due to our activities, products and services.**
- **Prevent injuries & ill health in our activities at workplace.**
- **Continually improve our EHS management system performance.**

We will strive to:

- **Conserve resources such as power, water, fuels, oils, compressed air & wood.**
- **Minimize use and adverse impact of hazardous chemicals handled.**
- **Minimize generation and adverse impact of hazardous waste.**

We will communicate this policy to our employees & contractors and make it available to public & interested parties on request.

ATUL KIRLOSKAR
Chairman & Managing Director

05 January 2009

3 Safety Guidelines and Environmental Awareness

Improper engine operation, maintenance or repair can be injurious to both engine / genset and operators.

Do not undertake any operation unless you have read and understood the information in this manual.

Reading of information makes you only aware of possible safety hazards. It does not necessarily give the competence to execute these operations.

Execution must be entrusted to trained operators and service dealers.

The guidelines given are not exhaustive and considering all possibilities. Do not attempt to use any procedure, tool and procedure which are not recommended in this manual.

Kirloskar Oil Engines Ltd. is committed to reduce the damage to the environment through our products. KOEL's environmental policy is enclosed for reference.

In following paragraphs, major safety precautions for the safety of both operators and the engine, and responsibility for environment during operations of our diesel engines are highlighted. As an esteemed customer of Kirloskar Engines, you are also part of Kirloskar family and we hope that you will join us in our efforts to protect the environment to the best of our capabilities.

In this note, we have given guidelines for identification of hazardous waste and their disposal. In case you require any specific information, kindly contact 'Management Representative -EMS - KOEL.

Safety Guidelines :

Commissioning and General Instructions.

Before putting the engine into operation for the first time, read the operating instructions carefully and familiarize yourself with the "critical" points. If you are unsure, ask your KIRLOSKAR representative.

- Prohibit access of unauthorized persons to engine room.
- Make engine operating persons responsible for the safety of persons who enter the engine room.
- Do not wear loose clothing or jewelry that can get caught in the engine parts
- Wear hard hat, protective glasses as required.
- Make certain that all protective guards and covers are in place and properly clamped.
- Use cleaning solutions with care.
- Do not use glass containers for maintenance fluids, They can break.
- Keep engine room clean, free of oil and grease spillage, to avoid slippage.
- During engine lifting, no one should be allowed to stand underneath or pass underneath. Keep lifting gear in good condition.
- Engine must be started and operated by authorized personnel.
- Do not touch running engine with bare hands. There is a risk of burns.
- Keep away from running engine. Do not go too near to the rotating parts.
- Fuel is inflammable. Do not smoke in the engine room, or in the vicinity of fuel storage. Do not use naked lights in the vicinity of fuel. The fuel tank must be filled only when the engine is switched off.
- Exhaust gases are toxic. Ensure adequate ventilation and air circulation.

Starting the Engine.

- Make sure all guards and covers are in place and secure.
- Engine room is properly cleaned of all spillage of oil and fuel.
- Automatic shut off circuits are in place and are not bypassed.
- Inspect engine for possible potential hazards.

Engine Operation

- Never demand more from the engine. The injection pump must not be adjusted.
- If faults occur, find the cause immediately and have it eliminate in order to prevent more serious of damage.
- Use only genuine KIRLOSKAR spare parts.
- Never let the engine run when dry, i.e. without lube oil or coolant. Use only KIRLOSKAR approved service products (engine oil, anti-freeze and anticorrosion agent).
- Pay attention to cleanliness. The Diesel fuel must be free of water.
- Have the engine maintained at the specified intervals.
- Do not switch off the engine immediately when it is warm, but let it run without load for about 5 minutes so that temperature equalization can take place.
- Never put cold coolant into an overheated engine.
- Do not add so much engine oil that the oil level rises above the max. marking on the dipstick.
- Always ensure that the testing and monitoring equipment (for battery charge, oil pressure, and coolant temperature) function satisfactorily.
- Comply with instructions for operation of the alternator.
- Do not let the water pump run dry. If there is a risk of frost, drain the water when the engine switched off.

Maintenance operations

- Stop the engine. Allow engine to cool before any repair work is commenced.
- Ensure that protective locks and controls are in place.
- Disconnect batteries.
- Do not attempt any repairs, which you do not understand.
- Use only recommended tools which are in satisfactory condition.
- During cleaning, do not use pressurized air. It can cause personal injury. Wear protective face shield, protective clothes and footwear during such cleaning.
- Do not tighten or loosen pipes, hoses during operation. The fluid inside will be under pressure and can cause severe injury.
- Do not bend or strike high pressure pipes. Do not install bent or damaged lines, tubes.
- Inspect all lines for leakage. Leaks can cause fire.
- When checking injectors, do not put your hands under the jet. Do not inhale atomized fuel.
- Do not attempt to open cooling system when the coolant is hot.
- While handling coolants, battery fluids, avoid contact with skin and eyes.

Storage

- All fuels, most lubricants and coolant additives are inflammable. Store them in a separately marked area, in properly marked containers, away from unauthorized access.
- Store all oily rags and cleaning cloths in a safe place.
- Do not smoke in the storage area.
- Have a fire extinguisher available. Train operators for how to use it. Keep is periodically checked and serviced.

Environmental Aspects and Awareness

A variety of waste products are generated through engine operations, exhaust gases, used and replaced oil, changed filter elements, replaced components, batteries and the oil filled cleaning cloths. Many of them are of hazardous nature. Careful disposal of these products is important.

Exhaust gases should be properly ventilated out of the engine room. The exhaust stack should be of sufficient height to conform to the requirements of local pollution control board. The engine operations should be carried out in accordance with the instructions given in the maintenance manual. This will avoid generation of excessive smoke or uncontrolled pollution through exhaust.

Waste / used oils are classified as hazardous material. It may appear to have only hazards associated with flammability and combustibility, they can carry health hazards. Used oil must be properly managed. It should not be mixed with other wastes, as the other ordinary waste will also get classified as hazardous waste. The cleaning cloths, used for wiping of spilled oil or for cleaning of components also falls into this category. These wastes should be either sent to parties to collect used oil for regeneration and who have proper waste disposal system for the residue generated, or should be disposed of in a properly located and constructed landfill.

Used and replaced fuel and lubricating oil filters are equally hazardous as the used oil. These should be disposed of in a properly located and constructed landfill.

Batteries contain acid, lead which are hazardous. To reduce wastage, recharge batteries at proper interval. For best results, recharge at the first sign of weakness. Batteries last upto four times longer when charged after only a 50 % discharge. Find -out from the service stations or battery charging outfits and return the used batteries to these stations for disposal.

Dispose off the used components in accordance with the type of material.

Health precautions

- Wear protective gloves and head gear.
- Do not put oily rags into your pockets.
- Avoid prolonged or repeated skin contact with used engine oil.
- Change oil-soaked clothing and shoes
- Clean skin which has been in contact with engine oil.
    - Wash thoroughly with soap and water.
    - Certain products make it easier to clean your hands.
    - Do not use petrol, Diesel, thinners or solvents as washing agents.
- After washing apply a fatty skin cream to the skin.

4. Technical information

4.1. Engine model and serial number

The engine model and serial number is located on the engine as illustrated. These numbers are required when requesting warranty and ordering parts. They are also referred to as engine model and serial number because of their location.

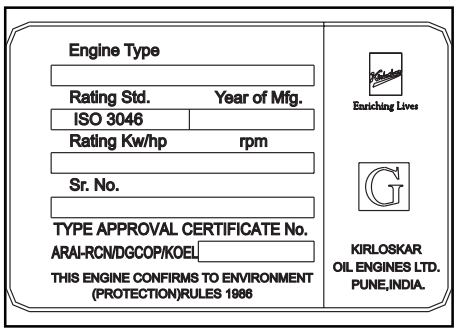

- Engine serial No. (eg. 1) : DV10

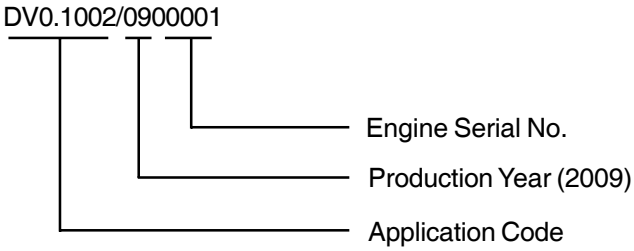

- Engine serial No. (eg. 2) : DV8

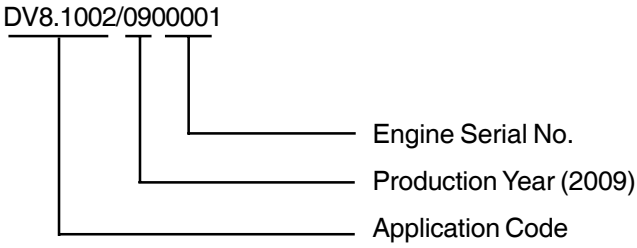

4.2. Engine type

The Engines DV series engines are 90^0 V series water-cooled four-stroke diesel engines with direct injection. It is turbocharged and After-cooled engine.

4.2.1. Cylinder block

The cylinder block is a single piece of alloy cast iron. To increase its stiffness, it is extended to a level below the crankshaft center line. The engine has wet cylinder liners and individual cylinder heads with struck-in valve seat rings and replaceable valve guides,

4.2.2. Piston con-rod / crankshaft

The forged crankshaft has detachable counterweights (Balance Weights). Radial oil seal is on crankshaft at crank pulley and at flywheel end oil seal is on crank gear. Flywheel end and crank gear end is same for the engine.

The con-rods (connecting rods) are die-forged, diagonally split and can be removed through the top of the cylinders together with the pistons. Crankshaft and connecting rods run in steel-backed lead bronze ready-to fit type bearings.

4.3 ENGINE SPECIFICATIONS FOR DV SERIES ENGINES

Sr. No.	Model	Unit	DV8	DV10	DV12
1	Bore x Stroke	mm	130x150	130x150	130x150
2	Firing Order		1-5-7-2-6-3-4-8	1-6-5-10-2-7-3-8-4-9	1-12-5-8-3-10-6-7-2-11-4-9
3	Displacement	lit.	15.93	19.91	23.89
4	Number of Cylinder		8	10	12
5	Direction of Rotation Viewed from F.W.E.		← Anti-clockwise →		
6	Aspiration		← Turbocharged Aftercooled →		
7	Compression Ratio		← 16.5 : 1 →		
8	Starting Arrangement		← Electric Start - 24V (2x12V) →		
9	Governer		← Electronic Type →		
10	Class of Governing		← A0 →		
11	Specific Fuel Consumption Under Std. Test Conditions	gm/kw-hr.	198.64	198.64	200
12	Fuel Timing	deg. BTDC	16±1	16±1	16±1
13	Injector Opening Pressure	bar	250	250	250
14	Valve Clearance - Inlet	mm	0.35	0.35	0.35
	Exhaust	mm	0.35	0.35	0.35
15	Bumping Clearance	mm	1.4 to 1.55	1.4 to 1.55	1.4 to 1.55
16	Lube Oil Consumption (max)	gm/hr.	← 0.2 % of Fuel Consumption →		
17	Recommended Lube Oil		← K Oil Super →		
18	Lube Oil Pump Flow at 3.5 bar pressure	lpm	130	130	145
19	Lube Oil Sump Capacity	lit.	38	42	48

4.3 ENGINE SPECIFICATIONS FOR DV SERIES ENGINES

Sr. No.	Model	Unit	DV8	DV10	DV12
20	Lube Oil System Capacity	lit.	44	47	57
21	Maximum Engine Inclination	deg.	15	15	15
22	Rated Output Continuous - ISO 3046	kw.	360	448	559
23	Rated Output Standby - ISO 3046	kw.	394	495	613
24	Rated Speed	rpm	1500	1500	1500
25	B. M. E. P at Rated Output	bar	18.1	18.0	18.7
26	Overall Diamensions - L x W x H	mm	1603 x 1125 x 1410	1793 x 1125 x 1410	1983 x 1125 x 1410
27	Dry Engine Weight - With Flywheel & SAE1 Flywheel Hsg.	kg.	1508	1885	2262
28	Noise Level (dBA) at 1m	dBA	< 75	< 75	< 75
29	Exhaust Back Pressure - Max	mm of Hg	50	50	50
30	Recommended Battery Capacity	Ah	180	180	180

4.4 Engine Assembly

4.4.1 Engine Sectional View (Longitudinal)

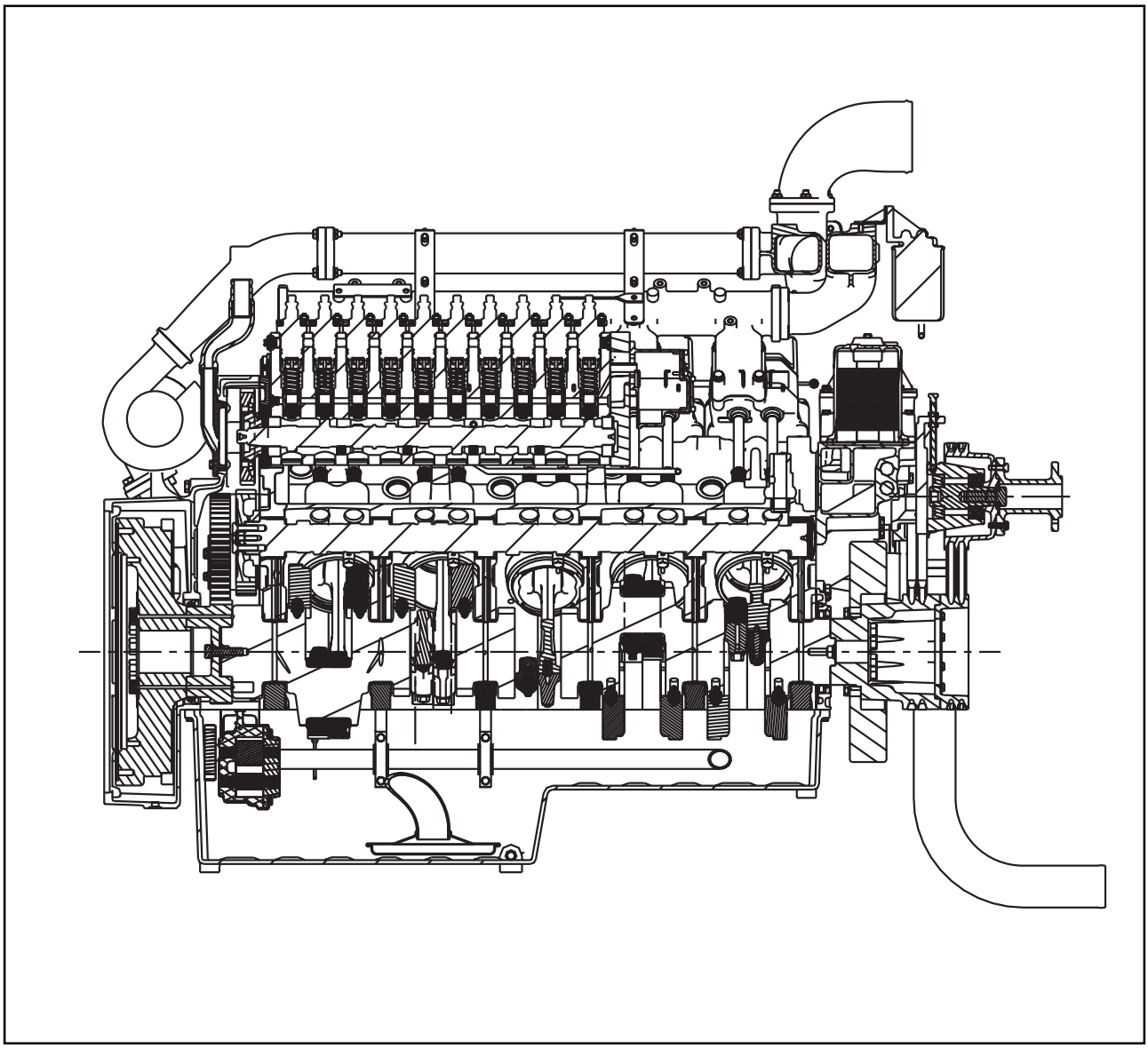

4.4.2 Engine Sectional View (Cross)

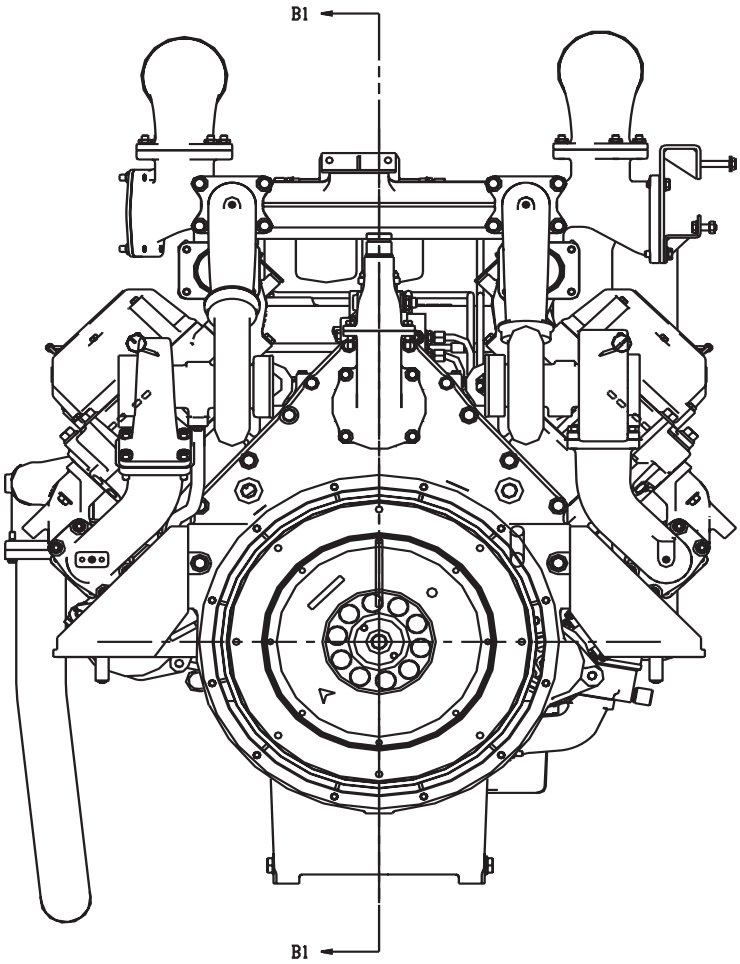

4.4.3 Engine illustrations

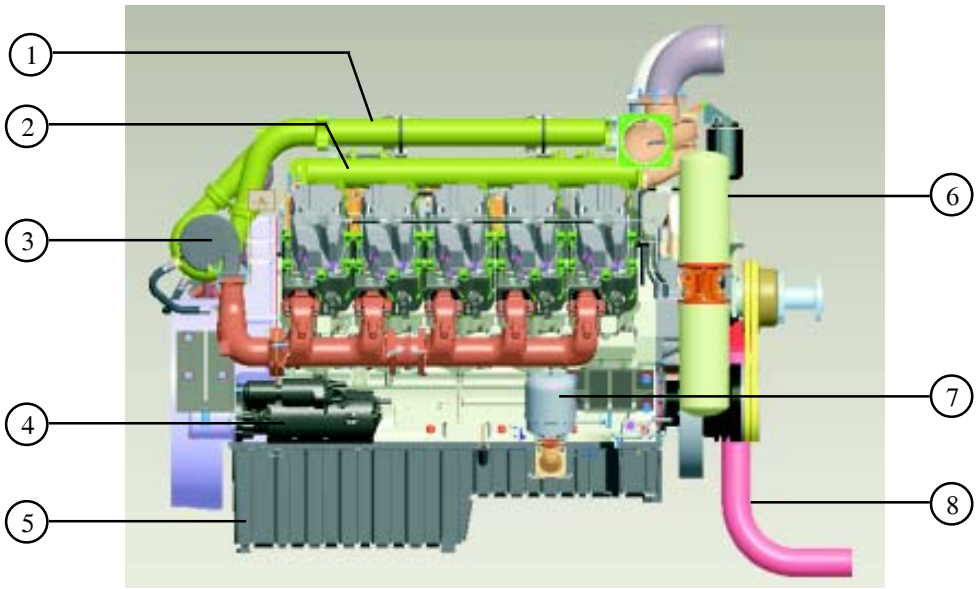

Starter Side

1. Air Intake Pipe To Intercooler
2. Air Intake Pipe From Intercooler
3. Turbocharger
4. Starter
5. Lube Oil Sump
6. Lube Oil Filter
7. Centrifuge
8. W.I.Manifold

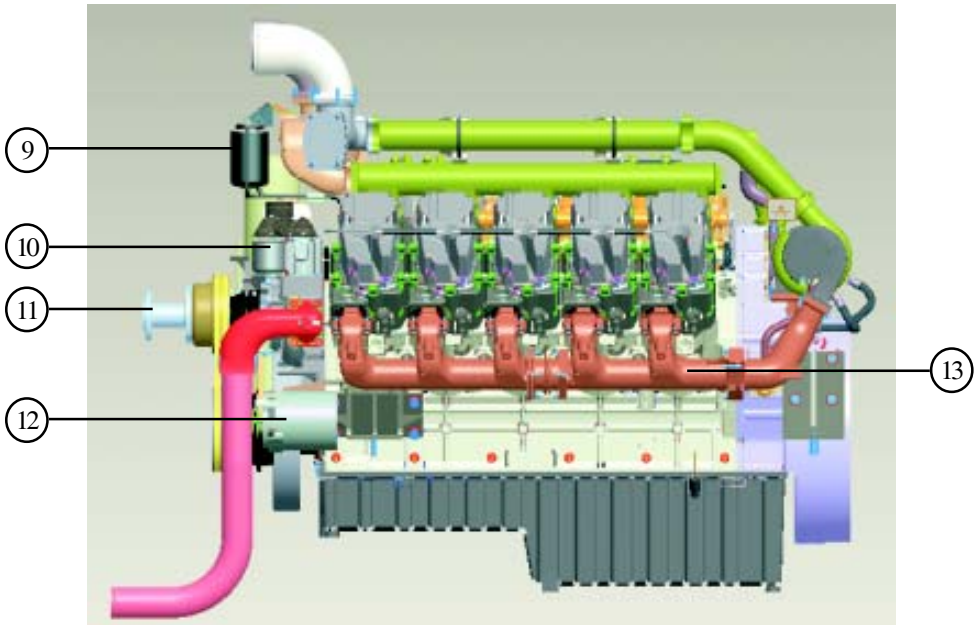

Alternator Side

9. Fuel Filter
10. Thermostat
11. Fan Adaptor
12. Alternator
13. Exhaust Manifold

4.4.3 Engine illustrations

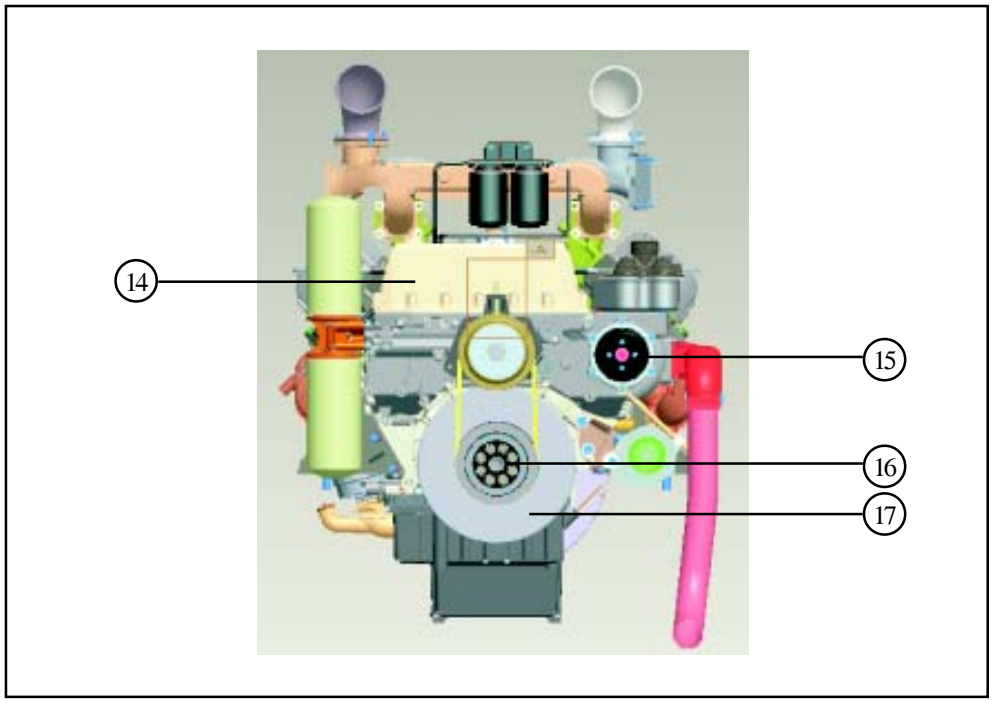

Crank Pulley Side

14. Lube Oil Cooler
15. Water Pump
16. Crank Pulley
17. Vibration Damper

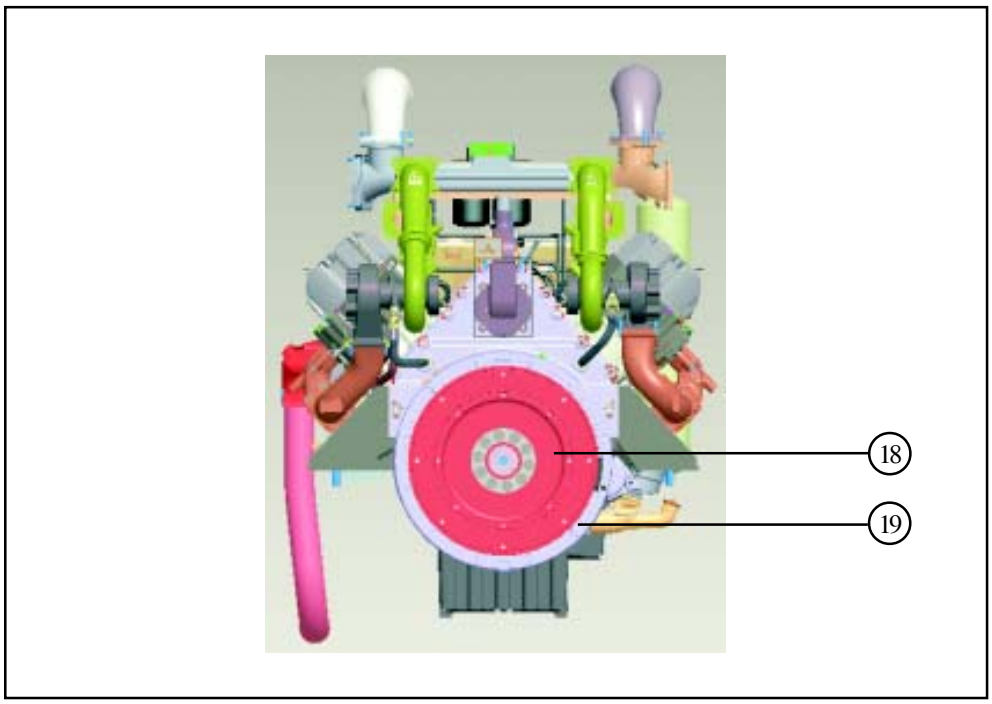

Flywheel Side

18. Flywheel
19. Flywheel Housing

4.5 Gear Train Arrangment

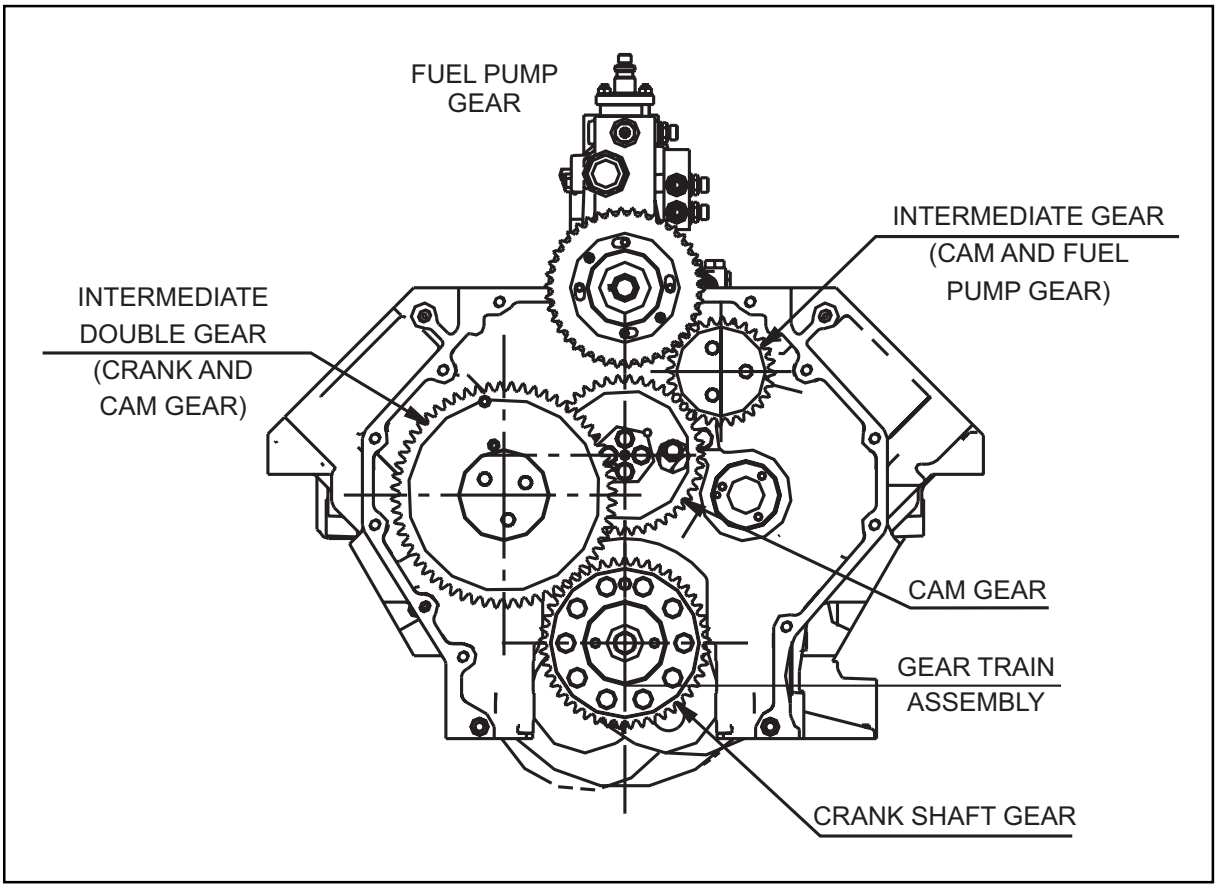

Camshaft, lube oil pump and fuel injection pump are driven by a gear train arranged at Flywheel End. Water pump is belt driven.

4.6 Valves

The overhead valves are actuated via chilled cast iron tappets, push rods and rocker arms from the camshaft.

4.7 Lubrication system

The engine is provided with force-feed lubrication by Gear type pump.

The pressure is produced by a gear pump whose drive gear is in mesh with the crankshaft gear at the flywheel end of engine.

The oil pump draws the oil from the oil sump and delivers it through the oil cooler and oil filter to the main distributor gallery and from there to the main bearings, big-end bearings and camshaft bearings as well as to the small-end bearings and the rocker arms.

The injection pump and the turbocharger are also connected to the engine lubricating system.

The cylinder walls and timing gears are splash-lubricated. Each cylinder has an oil jet provided for cooling the underside of the pistons.

The system includes adequate lube oil filtering by replacable 'Spin - on' filter cartridge. Two separate lube oil filter cartridges are provided for each side. Centrifuge lube oil filter is also provided for greater oil life.

The water cooled lube oil cooler is provided to maintain the lube oil temperature within limits.The relief valve controls the engine lube oil pressure. Relief valve is provided on delivery side of the lube oil pump. A secondary pressure relief valve is also provided in the engine crankcase.

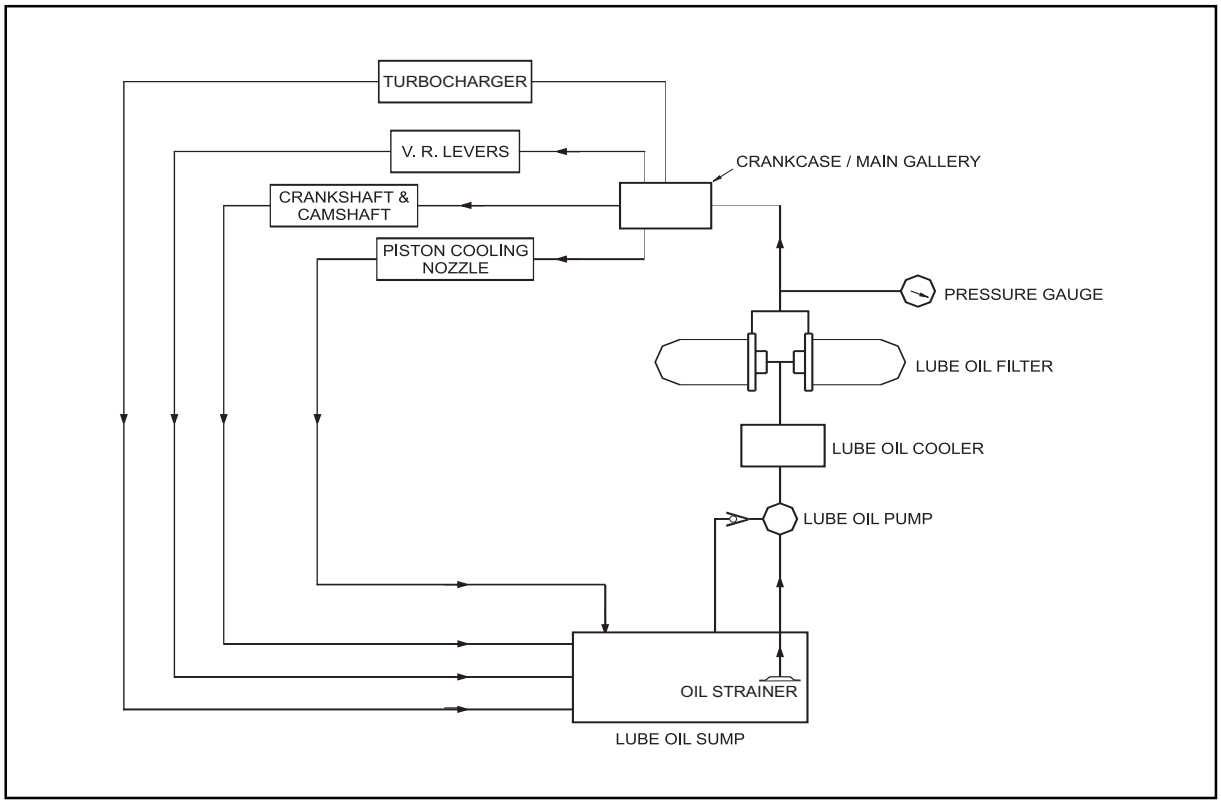

Lube Oil System Schematic

4.7.1 Oil Supply Through Oil Pump, Crankcase & Header

4.7.2 Oil Supply Through Cooler & Filter

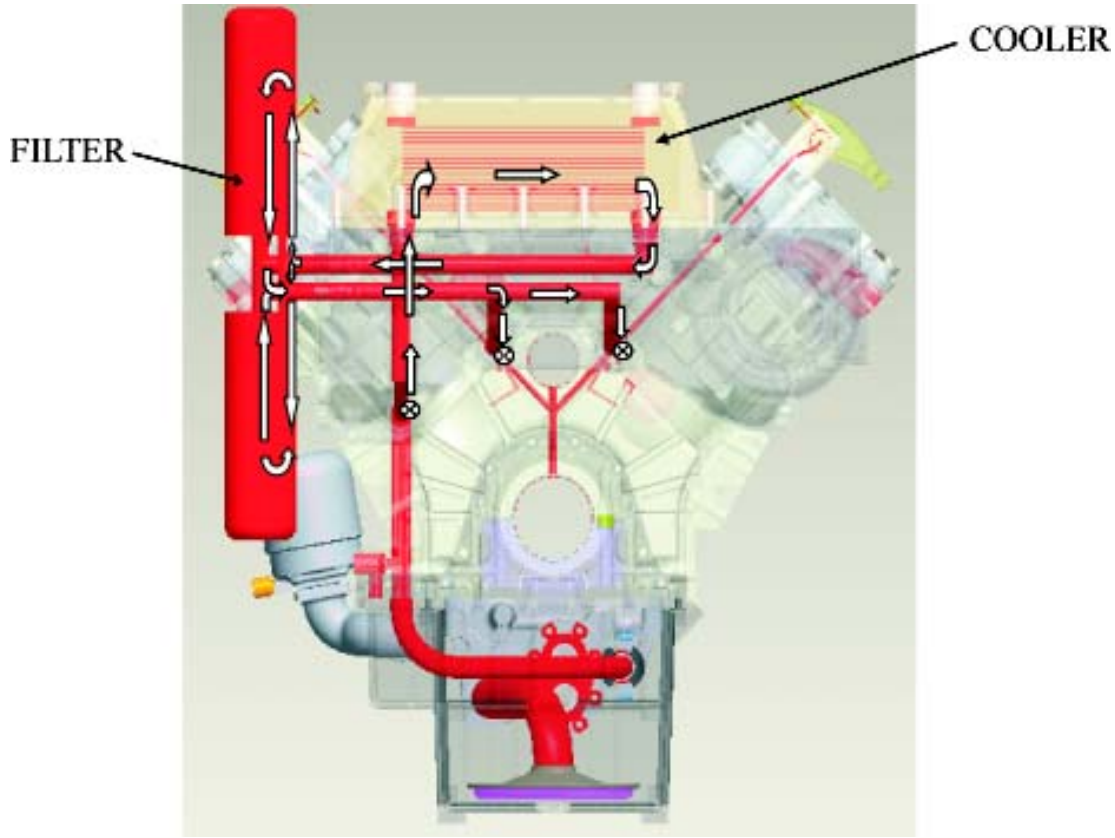

4.7.3 Oil Supply In Crankcase

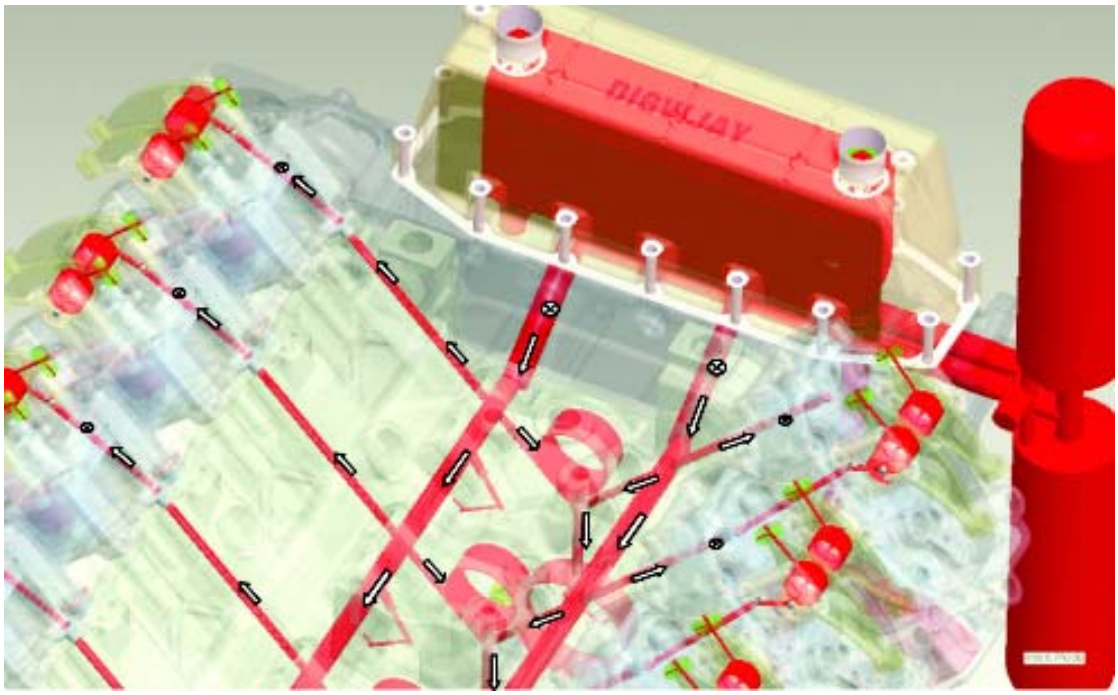

4.7.4 Rocker Lever Oil Supply

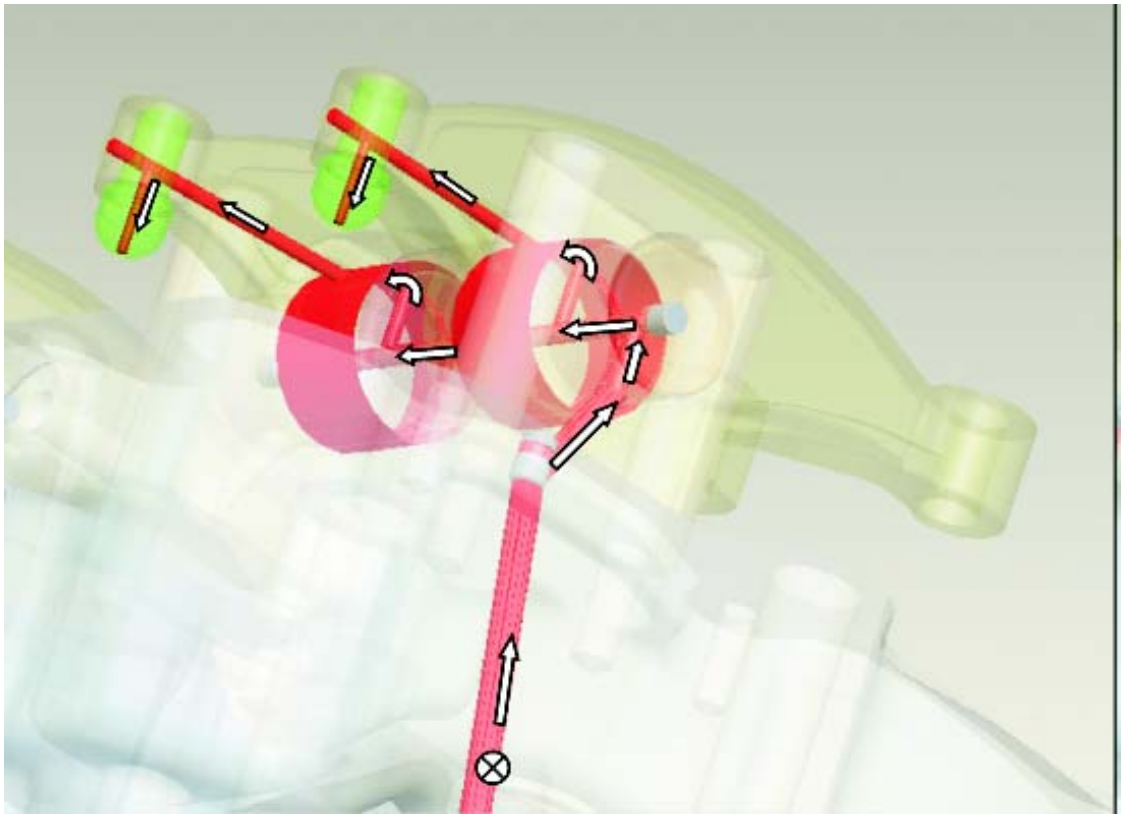

4.7.5 Crank & Cam Oil Supply

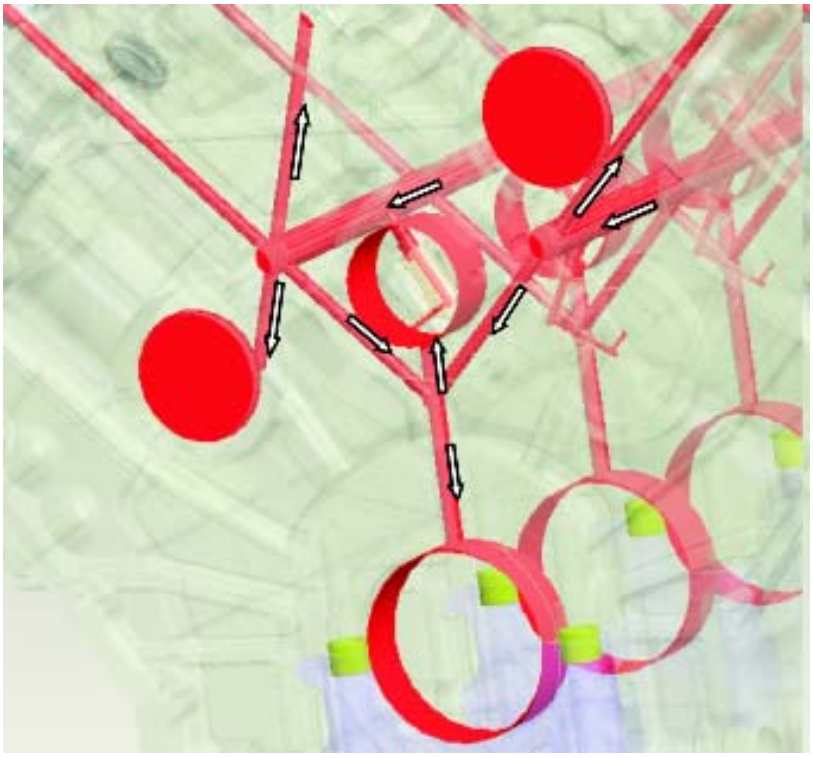

4.7.6 Piston Cooling Nozzle

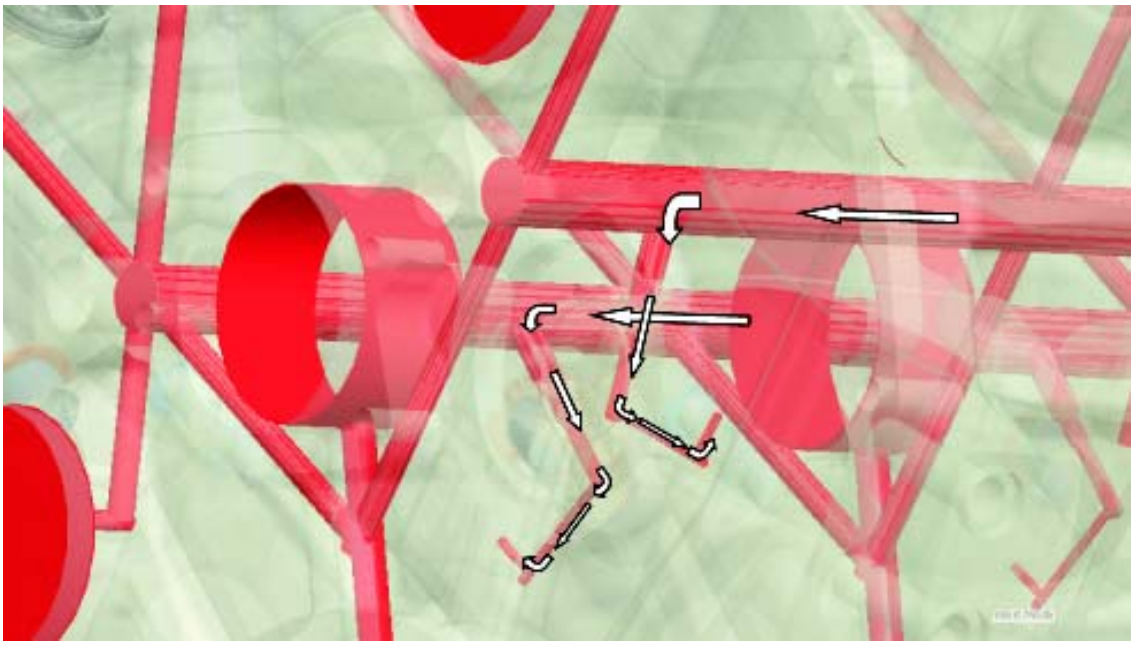

4.7.7 Recommend of lubricating oil

Initial factory fill is high quality break-in oil for API Service CF. During the break-in period (50 hours), frequently check the oil level. Somewhat higher oil consumption is normal until piston rings are seated. The oil level should be maintained in the safe range between the Min. and Max. marks on the dipstick. The safe range between the marks represents approximately 5 liters. To obtain the best engine performance and engine life, K - OIL SUPER is recommended. Engine oils are specified by API Service, letter designations and SAE viscosity numbers. If the specified motor oil is not available, use a reputable brand of engine oil labeled for API Service CF and SAE viscosity 30 or 15W40. Refer to oil identification symbol on the container. Engine oil should be changed at the specified intervals. (First 50 Hr & Every 500 Hours)

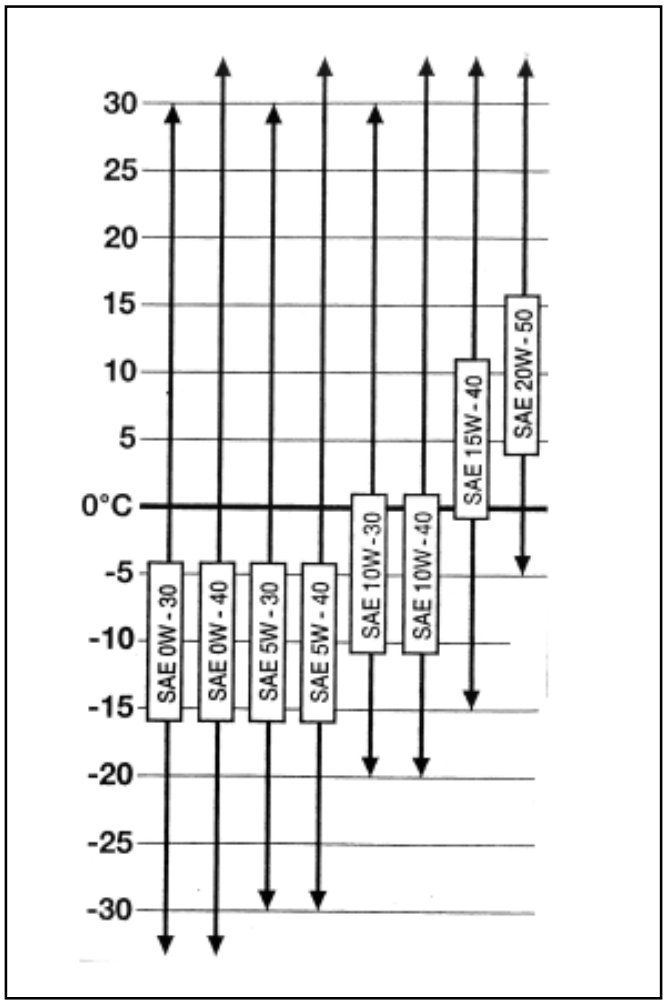

4.7.8 Lube Oil cooler

Lube oil cooler is provided between the oil pump and the lube oil filter. This cooler is a plate type heat exchanger.

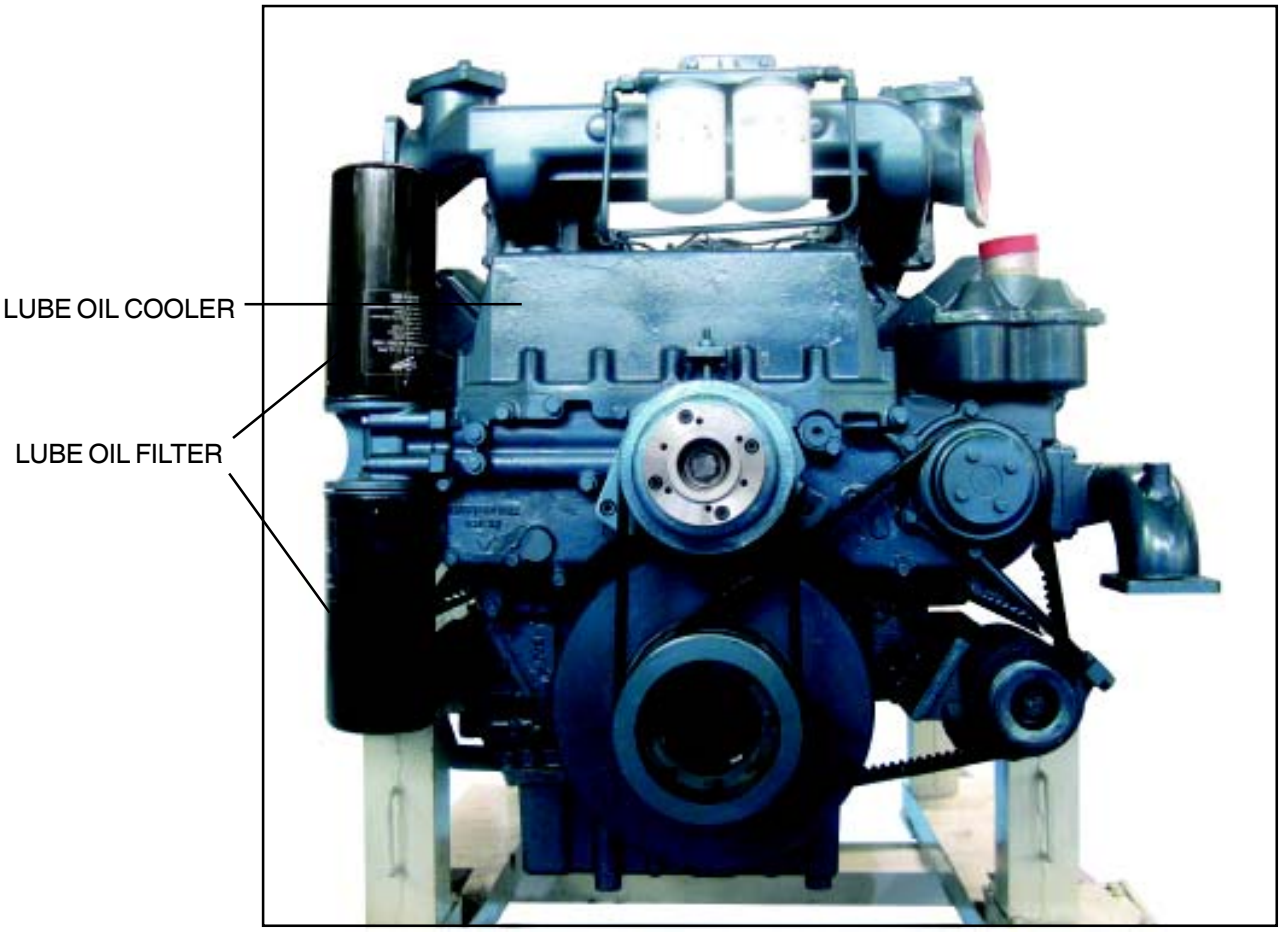

4.7.9 Lube Oil filter

Check for oil pressure and oil leaks, and repair or replace the oil filter if necessary. Change the oil filter cartridge simultaneously at every replacement of engine oil.

4.8 Fuel System

Fuel system consists of fuel pump, feed pump, fuel filter, high pressure pipes & leak off pipe etc. Fuel is supplied to fuel pump by feed pump (fuel lift pump) incorporated in the fuel pump itself. A dual type spin-on fuel filter consisting of efficient pre and micro filter cartridges ensure supply of clean fuel to the engine. The schematic diagram below indicates the folw of fuel in the engine.

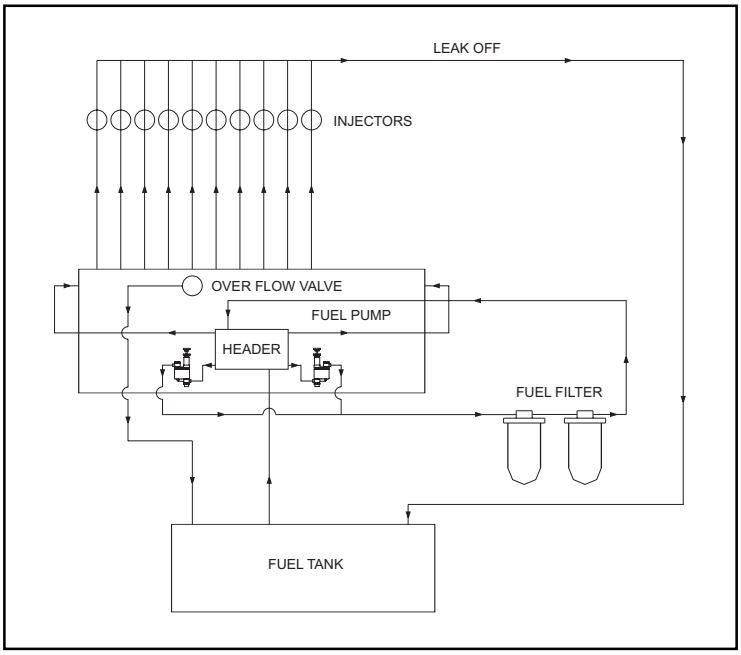

Fuel System Schematic

4.8.1 Injection pump

The in-line injection pump is driven via gears from the crankshaft. It is connected to the force feed lubricating system of the engine and consequently maintenance-free. The governor flange-mounted on the pump casing is a variable range governor designed to keep the speed set by the speed control unit constant under conditions of varying load.

Governor system for fuel injection pump consists of “Integral Actuator” and “ Speed Control Unit”.

1) Integral Actuator

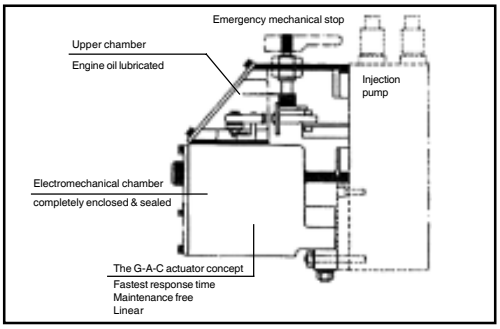

4.8.2 Fuel filter

This fuel filter has two functions not only oil filtering but also water separating. Before entering the suction chamber of the injection pump, the fuel is cleaned in a strainer of fuel feed pump and a fuel filter. Drain water in cartridge with loosening the cock under filter manually (6) from time to time. The fuel filter (Cartridge) should be replaced at first 50 & Every 250 hours.

A water separator is also provided in the system before fuel filter to remove moisture in fuel.

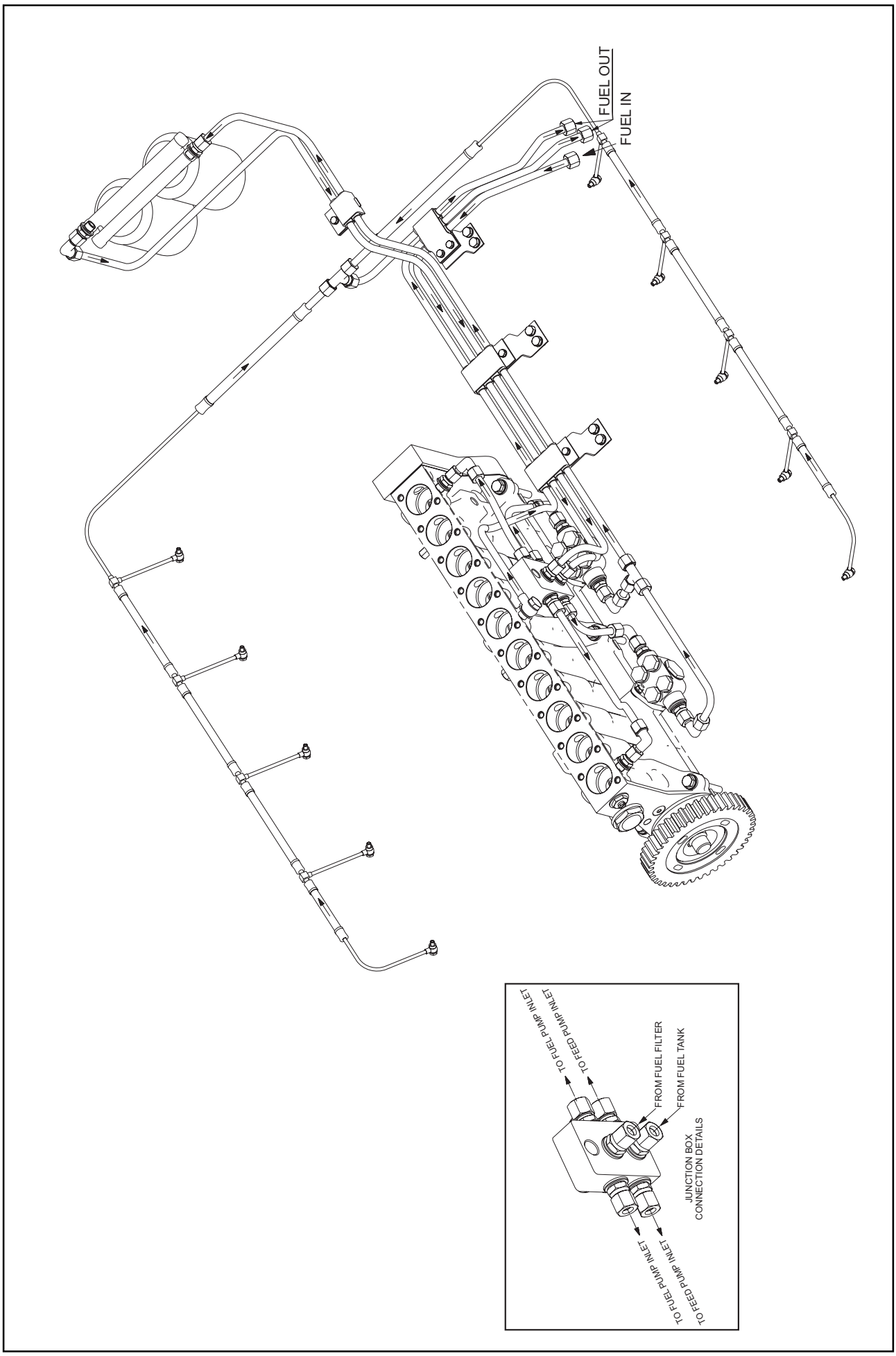
FUEL OUT
FUEL IN
TO FUEL PUMP INLET
TO FEED PUMP INLET
FROM FUEL FILTER
FROM FUEL TANK
JUNCTION BOX
CONNECTION DETAILS
TO FUEL PUMP INLET
TO FEED PUMP INLET

4.8.3 ELECTRONIC GOVERNOR - ESD5500E SERIES SPEED CONTROL UNIT

INTRODUCTION

The ESD5500E Series speed control unit is an all electronic device designed to control engine speed with fast and precise response to transient load changes. This closed loop control, when connected to a proportional electric actuator and supplied with a magnetic speed sensor signal, will control a wide variety of engines in an isochronous or droop mode. It is designed for high reliability and built ruggedly to withstand the engine environment.

Simplicity of installation and adjustment was foremost in the design. Non-interacting performance controls allow near optimum response to be easily obtained.

The primary features of the ESD5500E Series speed control unit are the engine STARTING FUEL and SPEED RAMPING adjustments. The use of these features will minimize engine exhaust smoke experienced prior to attaining engine operating speed.

Other features include adjustable droop and idle operation, inputs for accessories used in multi-engine or special applications, protection against reverse battery voltage, transient voltages, accidental short circuit of the actuator and fail safe design in the event of loss of speed sensor signal or battery supply.

The ESD5500E Series speed control unit is compatible with all GAG proportional actuators except the ACB2000 electric actuator. When the ESD5500E Series speed control unit is used with a ADC100 Series electric actuator, the DROOP adjustment range will be less due to this actuator's low current demand.

DESCRIPTION

Engine speed information for the speed control unit is usually received from a magnetic speed sensor. Any other signal generating device may be used provided the generated frequency is proportional to engine speed and meets the voltage input and frequency range specification. The speed sensor is typically mounted in close proximity to an engine driven ferrous gear, usually the engine ring gear. As theteeth of the gear pass the magnetic sensor, a signal is generated which is proportional to engine speed.

Signal strength must be within the range of the input amplifier. An amplitude of 0.5 to 120 volts RMS is required to allow the unit to function within its design specifications. The speed signal is applied to Terminals C and D of the speed control unit. Between these terminals there is an input impedance of over 33,000 ohms. Terminal D is internally connected to Terminal E, battery negative. Only one end of the shielded cable should be connected.

When a speed sensor signal is received by the controller, the signal is amplified and shaped by an internal circuit to provide an analog speed signal. If the speed sensor monitor does not detect a speed sensor signal, the output circuit of the speed control unit will turn off all current to the actuator.

A summing circuit receives the speed sensor signal along with the speed adjust set point input. The speed range has a ratio of 8:1 and is adjusted with a 25 turn potentiometer. The output from the summing circuit is the input to the dynamic control section of the speed control unit. The dynamic control circuit, of which the gain and stability adjustments are part, has a control function that will provide isochronous and stable performance for most engine types and fuel systems.

The speed control unit circuit is influenced by the gain and stability performance adjustments. The governor system sensitivity is increased with clockwise rotation of the gain adjustment. The gain adjustment has a range of 33:1. The stability adjustment, when advanced clockwise, increases the time rate of response of the governor system to match the various time constants of a wide variety of engines. The speed control unit is a PID device, the "D", derivative portion can be varied when required. (See Instability section.)

During the engine cranking cycle, STARTING FUEL can be adjusted from an almost closed, to a nearly full fuel position. Once the engine has started, the speed control point is determined, first by the IDLE speed set point and the SPEED RAMPING circuit. After engine speed ramping has been completed, the engine will be at its governed operating speed. At the desired governed engine speed, the actuator will be energized with sufficient current to maintain the desired engine speed, independent of load (isochronous operation).

The output circuit provides switching current at a frequency of about 500 Hz. to drive the actuator. Since the switching frequency is well beyond the natural frequency of the actuator, there is no visible motion of the actuator output shaft. Switching the output transistors reduces its internal power dissipation for efficient

power control. The output circuit can provide current of up to 10 amps continuous at 25°C for 12 and 24 VDC battery systems. The actuator responds to the average current to position the engine fuel control lever.

In standard operation, the speed control unit performance is isochronous. Droop governing can be selected by connecting terminals K and L and the percent of droop governing can be varied with the droop adjustment control. The droop range can be decreased by connecting Terminals G and H.

The speed control unit has several performance and protection features which enhance the governor system. A speed anticipation circuit minimizes speed overshoot on engine startup or when large increments of load are applied to the engine. Engine idle speed can be remotely selected and is adjustable. Accessory inputs to achieve variable speed operation and multi-engine control can be accepted by the ESD5500E Series speed control unit from GAG load sharing modules, automatic synchronizers, ramp generators and other accessory engine control modules. Protection against reverse battery voltage and transient voltages is provided. The design is fail-safe in the event of loss of speed sensor signal or battery supply.

APPLICATION AND INSTALLATION INFORMATION

The speed control unit is rugged enough to be placed in a control cabinet or engine mounted enclosure with other dedicated control equipment. If water, mist, or condensation may come in contact with the controller, it should be mounted vertically. This will allow the fluid to drain away from the speed control unit.

Extreme heat should be avoided.

WARNING

An overspeed shutdown device, independent of the governor system, should be provided to prevent loss of engine control which may cause personal injury or equipment damage. Do not rely exclusively on the governor system electric actuator to prevent overspeed. A secondary shutoff device, such as a fuel solenoid must be used.

WIRING

Basic electrical connections are illustrated in Diagram 1. Actuator and battery connections to Terminals A, B, E, and F should be #16 AWG (1.3 mm sq.) or larger. Long cables require an increased wire size to minimize voltage drops.

The battery positive (+) input, Terminal F, should be fused for 15 amps as illustrated.

Magnetic speed sensor connections to Terminals C and D **MUST BE TWISTED AND/OR SHIELDED** for their entire length. The speed sensor cable shield should be ideally connected to terminal D. The shield should be insulated to insure no other part of the shield comes in contact with engine ground, otherwise stray speed signals may be introduced to the speed control unit. With the engine stopped, adjust the gap between the magnetic speed sensor and the ring gear teeth. The gap should not be any smaller than 0.020 in. (0.45 mm). Usually, backing out the speed sensor 3/4 turn after touching the ring gear tooth will achieve a satisfactory air gap. The magnetic speed sensor voltage should be at least 1 VAC RMS during cranking.

ADJUSTMENTS

Before Starting Engine

Check to insure the GAIN and S**TABILITY** adjustments, and if applied, the external **SPEED TRIM CONTROL** are set to mid position.

Preset the ESD5500E as follows:

STARTING FUEL ..... FULL CW (Maximum Fuel)

SPEED RAMPING ..... FULL CCW (Fastest)

Start Engine

The speed control unit governed speed setting is factory set at approximately engine idle speed. (1000 Hz., speed sensor signal)

Crank the engine with DC power applied to the governor system. The actuator will energize to the maximum fuel position until the engine starts. The governor system should control the engine at a **low idle** speed. If the engine is unstable after starting, turn the **GAIN and STABILITY** adjustments counterclockwise until the engine is stable.

Governor Speed Setting

The governed speed set point is increased by clockwise rotation of the **SPEED** adjustment control. Remote speed adjustment can be obtained with an optional 5K Speed Trim Control. (See diagram on Page 31)

Governor Performance

Once the engine is at operating speed and at no load, the following governor performance adjustment can be made.

1. Rotate the **GAIN** adjustment clockwise until instability develops. Gradually move the adjustment counterclockwise until stability returns. Move the adjustment one division further counterclockwise to insure stable performance.
2. Rotate the STABILITY adjustment clockwise until instability develops. Gradually move the adjustment counterclockwise until stability returns. Move the adjustment one division further to insure stable performance.
3. Gain and stability adjustments may require minor changes after engine load is applied. Normally, adjustments made at no load achieve satisfactory performance. A strip chart recorder can be used to further optimize the adjustments.

If instability cannot be corrected or further performance improvements are required, refer to the section on **SYSTEM TROUBLESHOOTING.**

Starting Fuel Adjustment

The engine's exhaust smoke at start-up can be minimized by completing the following adjustments.

1. Place the engine in idle by connecting Terminals M & G.
2. Adjust the **IDLE** speed for as low a speed setting as the application allows.
3. Adjust the **STARTING FUEL CCW** until the engine speed begins to fall. Increase the **STARTING FUEL** slightly so that the idle speed is returned to the desired level.
4. Stop the engine.

One of two methods of operation for the ESD5500E may now be selected.

Method 1 : Start the engine and accelerate directly to the operating speed (Gen Sets, etc.).

or

Method 2 : Start the engine and control at an idle speed for a period of time prior to accelerating to the operating speed. This' method separates the starting process so that each may be optimized for the lowest smoke emissions.

Method 1

Remove the connection between Terminals M & G. Start the engine and adjust the **SPEED RAMPING** for the least smoke on acceleration from idle to rated speed. If the starting smoke is excessive, the STARTING FUEL may need to be adjusted slightly CCW. If the starting time is too long, the STARTING FUEL may need to be adjusted slightly CW.

Method 2

Replace the connection between Terminals M & G with a switch, usually an oil pressure switch. Start the engine. If the starting smoke is excessive, the STARTING FUEL may need to be adjusted slightly CCW. If the starting time is too long, the STARTING FUEL may need to be adjusted slightly CW.

When the switch opens, adjust the SPEED RAMPING for the least amount of smoke when accelerating from idle speed to rated speed.

Idle Speed Setting

If the IDLE speed setting was not adjusted as detailed in “Starting Fuel Adjustment” section, then place the optional external selector switch in the IDLE position. The idle speed set point is increased by clockwise rotation of the IDLE adjustment control. When the engine is at idle speed, the speed control unit applies droop to the governor system to insure stable operation.

Speed Droop Operation

Droop is typically used for the paralleling of engine driven generators.

Place the optional external selector switch in the DROOP position, DROOP is increased by clockwise rotation of the DROOP adjustment control. When in droop operation, the engine speed will decrease as engine load increases. The percentage of droop is based on the actuator current change from engine no load to full load. A wide range of droop is available with the internal control. Droop level requirements above 10% are unusual.

If droop levels experienced are higher or lower than those required, contact the factory for assistance.

After the droop level has been adjusted, the rated engine speed setting may need to be reset. Check the engine speed and adjust the speed setting accordingly.

Accessory Input

The AUXilary Terminal N accepts input signals from load sharing units, auto synchronizers, and other governor system accessories, GAC accessories are directly connected to this terminal. It is recommended that this connection from accessories be shielded as it is a sensitive input terminal.

If the auto synchronizer is used alone, not in conjunction with a load sharing module, a 3 M ohm resistor should be connected between Terminals N and P. This is required to match the voltage levels between the speed control unit and the synchronizer.

When an accessory is connected to Terminal N, the speed will decrease and the speed adjustment must be reset.

When operating in the upper end of the control unit frequency range, a jumper wire or frequency trim control may be required between Terminals G and J. This increases the frequency range of the speed control to over 7000 Hz.

Accessory Supply

The + 10 volt regulated supply, Terminal P, can be utilized to provide power to GAC governor system accessories. Up to 20 ma of current can be drawn from this supply. Ground reference is Terminal G. **Caution:** a short circuit on this terminal can damage the speed control unit.

ESD5500E Series Wiring Diagram and Outline

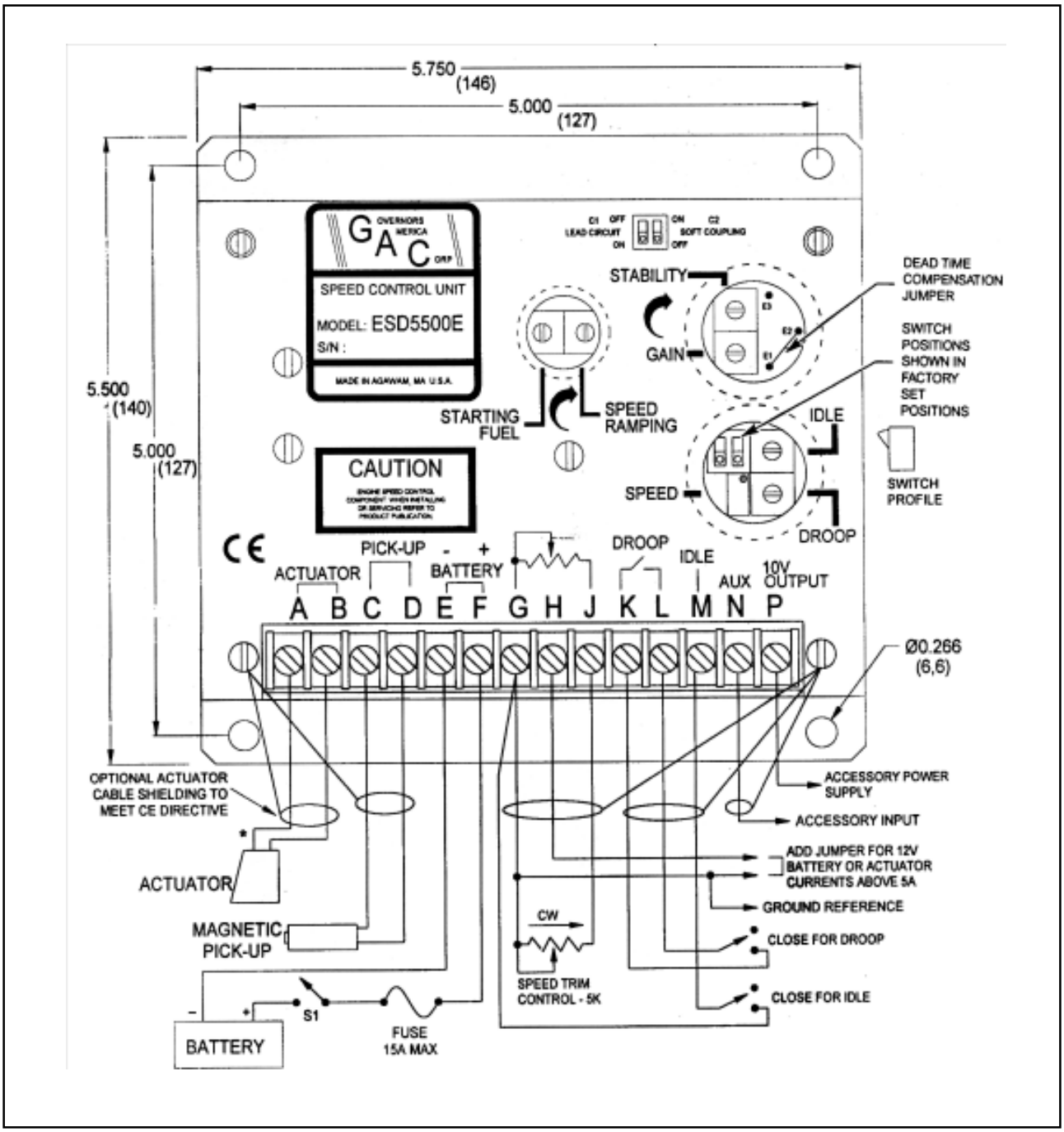

4.8.4 SYSTEM TROUBLESHOOTING

SYSTEM INOPERATIVE

If the engine governing system does not function, the fault may be determined by performing the voltage tests described in Steps 1,2,3, and 4. (+) and (-) refer to meter polarity. Should normal values be indicated as a result of following the trouble shooting steps, the fault may be with the actuator or the wiring to the actuator. See the actuator publication for testing details.

STEP	TERMINALS	NORMAL READING	PROBABLE CAUSE OF ABNORMAL READING
1.	F(+) & E(-)	Battery Supply Voltage (12 or 24 VDC)	1. DC battery power not connected. Check for blown fuse.
			2. Low battery voltage.
			3. Wiring error.
2.	C&D	1.0 VAC RMS min., while cranking	1. Gap between speed sensor and gear teeth too great. Check gap.
			2. Improper or defective wiring to the speed sensor. Resistance between terminals C and D should be 30 to 1200ohms.
			3. Defective speed sensor.
3.	P(+) & G(-)	10 VDC, Internal Supply	1. Short on terminal P. (This will cause a defective unit.)
			2. Defective Speed Control.
4.	F(+) & A(-)	1.0 - 2.0 VDC while cranking	**1. SPEED** adjustment set too low.
			2. Short/open in actuator wiring.
			3. Defective speed control.
			4. Defective actuator. See Actuator Troubleshooting.

UNSATISFACTORY PERFORMANCE

If the governing system functions poorly, perform the following tests.

SYMPTOM	TEST	PROBABLE FAULT
Engine overspeeds	**1. Do not crank.** Apply DC power to governor system speed sensor at Terminals C&D.	1. Actuator goes to full fuel. Then, disconnect sensor at Terminals A (-) & If actuator still at full fuel - speed control unit defective. If actuator at minimum fuel position - erroneous speed signal. Check speed sensor data.
	2. Manually hold the engine at the desired running speed. Measure the DC voltage between Terminals A (-) & F(+) on the speed control unit.	1. If the voltage reading is 1.0 to 2.0 VDC, a) **SPEED** adjustment set above desired speed. b) Defective speed control unit. 2. If the voltage reading is above 2.0 VDC, a) Actuator or linkage binding. 3. If the voltage reading is below 1.0 VDC, a) Defective speed control unit. 4. Gain set too low.

SYMPTOM	TEST	PROBABLE FAULT
Actuator does not energize fully.	1. Measure the voltage at the battery while cranking.	1. If the voltage is less than 7V for a 12V system, or 14V for a 24V system, replace the battery if it is weak or undersized.
	2. Momentarily connect Terminals A and F. The actuator should move to the full fuel position.	1. Actuator or battery wiring in error. 2. Actuator or linkage binding. 3. Defective actuator. See actuator troubleshooting. 4. Fuse opens. Check for short in actuator or actuator wiring harness.
Engine remains below desired governed speed.	1. Measure the actuator output. Terminals A & B, while running under governor control.	1. If voltage measurement is within approximately 2 volts of the battery supply voltage, then fuel control restricted from reaching full fuel position. Possibly due to interference from the mechanical governor, carburetor spring or linkage alignment. 2. Speed setting too low.

SYSTEM TROUBLESHOOTING

Insufficient Magnetic Speed Sensor Signal

A strong magnetic speed sensor signal will eliminate the possibility of missed or extra pulses. The speed control unit will govern well with 0.5 volts RMS speed sensor signal. A speed sensor signal of 3 volts RMS or greater at governed speed is recommended. Measurement of the signal is made at Terminals C and D.

The amplitude of the speed sensor signal can be raised by reducing the gap between the speed sensor tip and the engine rind gear. The gap should not be any smaller than 0.020 in (0.45 mm). When the engine is stopped, back the speed sensor out by 3/4 turn after touching the ring gear tooth to achieve a satisfactory air gap.

Electromagnetic Compatibility (EMC)

EMI SUSCEPTIBILITY - The governor system can be adversely affected by large interfering signals that are conducted through the cabling or through direct radiation into the control circuits.

All GAC speed control units contain filters and shielding designed to protect the units sensitive circuits from moderate external interfering sources.

Although it is difficult to predict levels of interference, applications that include magnetos, solid state ignition systems, radio transmitters, voltage regulators or battery chargers should be considered suspect as possible interfering sources.

If it is suspected that external fields, either those that are radiated or conducted, are or will affect the governor systems operation, it is recommended to use shielded cable for all external connections. Be sure that only one end of the shields, including the speed sensor shield, is connected to a single point on the case of the speed control unit. Mount the speed control unit to a grounded metal back plate or place it in a sealed metal box.

Radiation is when the interfering signal is radiated directly through space to the governing system. To isolate the governor system electronics from this type of interference source, a metal shield or a solid metal container is usually effective.

Conduction is when the interfering signal is conducted through the interconnecting wiring to the governor system electronics. Shielded cables and installing filters are common remedies.

As an aid to help reduce the levels of EMI of a conductive nature, a battery line filter and shielded cables are conveniently supplied by GAC in KT130. To reduce the levels of EMI of a radiated nature, a shielded container P/N CA114 can be sourced from GAC and its distributors.

In severe high energy interference locations such as when the governor system is directly in the field of a powerful transmitting source, the shielding may require to be a special EMI class shielding. For these conditions, contact GAC application engineering for specific recommendations.

Instability

Instability in a closed loop speed control system can be categorized into two general types. PERIODIC appears to be sinusoidal and at a regular rate. **NON-PERIODIC** is a random wandering or an occasional deviation from a steady state band for no apparent reason.

Switch C1 controls the "Lead Circuit" found in the ESD5500. The normal position is "ON." Move the switch to the "OFF" position if there is fast instability in the system.

Switch C2 controls an additional circuit added in the ESD5500 that is designed to eliminate fast erratic governor behavior, caused by very soft or worn couplings in the drive train between the engine and generator. The normal position is "OFF." Move to the "ON" position if fast erratic engine behavior due to a soft coupling is experienced.

The PERIODIC type can be further classified as fast or slow instability. Fast instability is a 3 Hz. or faster irregularity of the speed and is usually a jitter. Slow periodic instability is below 3 Hz., can be very slow, and is sometimes violent.

If fast instability occurs, this is typically the governor responding to engine firings. Raising the engine speed increases the frequency of instability and vice versa. In this case, placing switch C1 in the "OFF" position will reduce the speed control unit's sensitivity to high frequency signals. Readjust the GAIN and STABILITY for optimum control. Should instability still be present, the removal of E1 to E2 jumper may help stabilize the engine. Post locations are illustrated in Diagram 1. Again, readjust the GAIN and STABILITY for optimum control. Interference from powerful electrical signals can also be the cause. Turn off the battery chargers or other electrical equipment to see if the system disappears.

Slow instability can have many causes. Adjustment of the **GAIN** and **STABILITY** usually cures most situations by matching the speed control unit dynamics. If this is unsuccessful, the dead time compensation can be modified. Add a capacitor from posts E2 to E3 (negative on E2). Post locations are illustrated in Diagram 1. Start with 10 mfds. and increase until instability is eliminated. The control system can also be optimized for best performance by following this procedure.

If slow instability is unaffected by this procedure, evaluate the fuel system and engine performance. Check the fuel system linkage for binding, high friction, or poor linkage. Be sure to check linkage during engine operation. Also look at the engine fuel system. Irregularities with carburetion or fuel injection systems can change engine power with a constant throttle setting. This can result in speed deviations beyond the control of the governor system. Adding a small amount of droop can help stabilize the system for troubleshooting.

NON-PERIODIC instability should respond to the **GAIN** control. If increasing the gain reduces the instability, then the problem is probably with the engine. Higher gain allows the governor to respond faster and correct for disturbance. Look for engine misfirings, an erratic fuel system, or load changes on the engine generator set voltage regulator. If the throttle is slightly erratic, but performance is fast, move switch C1 to the "OFF" position. This will tend to steady the system.

If unsuccessful in solving instability, contact the factory for assistance.

4.8.5 FUEL ACTUATOR

The 175 SERIES electric actuator is designed io mount directly on a Bosch “P” size fuel injection pump, with a right hand rack, in place of the mechanical governor. When the 175 actuator is installed on the fuel pump, an optimum performance, long life fuel control system results. An external fuel shut off lever is provided to manually override the actuator’s control. Also provided is an adjustable internal maximum fuel limit.

The 175 Series Electric Actuator can control fuel pumps of up to 8 cylinders. The actuator was designed with two isolated chambers. The upper chamber is wet with oil and contains the connection to the Fuel rack and art optional manual shut off mechanism. The sealed lower chamber contains electromagnetic components.

This design eliminates the possibility of magnetic particles or other oil contaminants interfering with the operation of the electric actuator. Unreliable devices such as bellows and sliding seals are not used so that no maintenance is required. The designed life of the actuator is typically longer than. that of the engine

SPECIFICATIONS

PERFORMANCE

Force ..... (See Figure 1)		6.2 lb. (27.5 N)
Operating stroke		0.80 in. (21 mm)
Response Time (10-90%, 2-19 mm)		35 mdrv.

ELECTRICAL POWER INPUT

Operating Voltage		12 or 24 V DC
Nominal Operating Current	12V DC version	4.0 A
	24V DC version	2.0 A
	12V DC version	5.8 A
	24V DC version	3.1 A

ENVIRONMENTAL

Operating Temperature	-40 to +95°C (-40 to + 200°F)
Relative Humidity	up to 100%
Vibration	20g, 20 - 500 Hz
Shock	20g @ 11 msec.

4.8.6 Fuel requirements

KOEL Diesel engines was designed to use Number 2-D diesel fuel or equivalent that meets specification DIN 51601-DK. For maximum fuel economy, Number 2-D fuel whenever possible. When temperatures are below -7'C(20°F), use Number 1-D fuel. If Number 1-D fuel is not available, the mixture of one kerosene to two gallons of Number 2-D fuel can be used. Once kerosene has been added, the engine should be run for several minutes to mix the fuel.

4.8.7 How to select fuel oil

Fuel quality is an important factor in obtaining satisfactory engine performance, long engine life, and acceptable exhaust emission levels. KOEL engines are designed to operate on most diesel fuels marketed today. In general, fuels meeting the properties of ASTM Designation D975 (grades 1-D and 2-D) have provided satisfactory performance. The ASTM 975 specification, however, does not in itself adequately define the fuel characteristics needed for assurance of fuel quality.The properties listed in the fuel oil selection chart below have provided optimum engine performance. Grade 2-D fuel is normally available for generator service. Grade 1-D fuel should not be used in pleasure craft engines, except in an emergency.

Fuel oil selection chart

General Fuel Classification	ASTM Test	No. 1 ASTM 1-D	No. 2 ASTM 2-D	DIN 51601
Gravity,°API #)	D 287	40 ~ 44	33 ~ 37	0.815 ~ 0.855
Flash Point Min.°F (°C)	D 93	100 (38)	125 (52)	131 (55)
Viscosity, Kinematic CST 100 °F (40 °C)	D 445	1.3 ~ 2.4	1.9 ~ 4.1	1.8 ~ 10
Cloud Point °F #)	D 2500	See Note 1)	See Note 1)	See Note 1)
Sulfur Content wt%, Max.	D 129	0.5	0.5	0.15
Carbon Residue on 10%, wt%, Max.	D 524	0.15	0.35	0.1
Accelerated Stability				
Total Insolubles mg/100 ml, Max. #)	D2274	1.5	1.5	
Ash, wt%, Max.	D482	0.01	0.01	
Cetane Number, Min.+)	D 613	45	45	>45
Distillation	D 86			
Temperature, °F(°C)				
IMP, Typican #)		350(177)	375(191)	
10% Typical #)		385(196)	430(221)	
50% Typical #)		45(218)	510(256)	680(360)
90% +)		500 (260) Max	625(329) Max	
End Point #)		550(288) Max	675(357) Max	
Water & Sediment	D 1796	0.05	0.05	0.05

#) Not specified In ASTM D 975

+) Differs from ASTM D 975

Note : 1. The cloud point should be 6°C(10°F) below the lowest expected fuel temperature to prevent clogging of fuel fitters by crystals.

4.9 Air Inlet System - Air cleaner

Air cleaner supplied with the engine is Dry Type aircleaner. It consists if two filter elements - Outer & Inner element. Outer element is the main filter element with in built cyclone separater which gives swirling effect to incoming air, to separate out heavy dust particles.The dust is collected in evacuator valve at the bottom of air cleaner housing.

Inner element is a 'Safety Element' to prevent entry of foreign particles & dust when Outer element has been removed.

In case that elements are deformed, damaged or if the air cleaner has a crack, replace it. By the definite interval, the elements must be cleaned and replaced.

- Replace Inner Element at Every 1000 Hrs
- Changing of air cleaner element (OUTER): Every 500 Hours

The intercooler is air to air type and has a large cooling fan capacity. The intercooler life and performance depends on the intake air condition greatly. Fouled air pollutes and clogs the air fins of intercooler. As a result of this, the engine output is decreased and engine malfunction is occurred. So you always check whether the intake air systems like air filter element are worn or polluted.

- Cleaning of intercooler fins: Every 500 hours at Normal site condition.

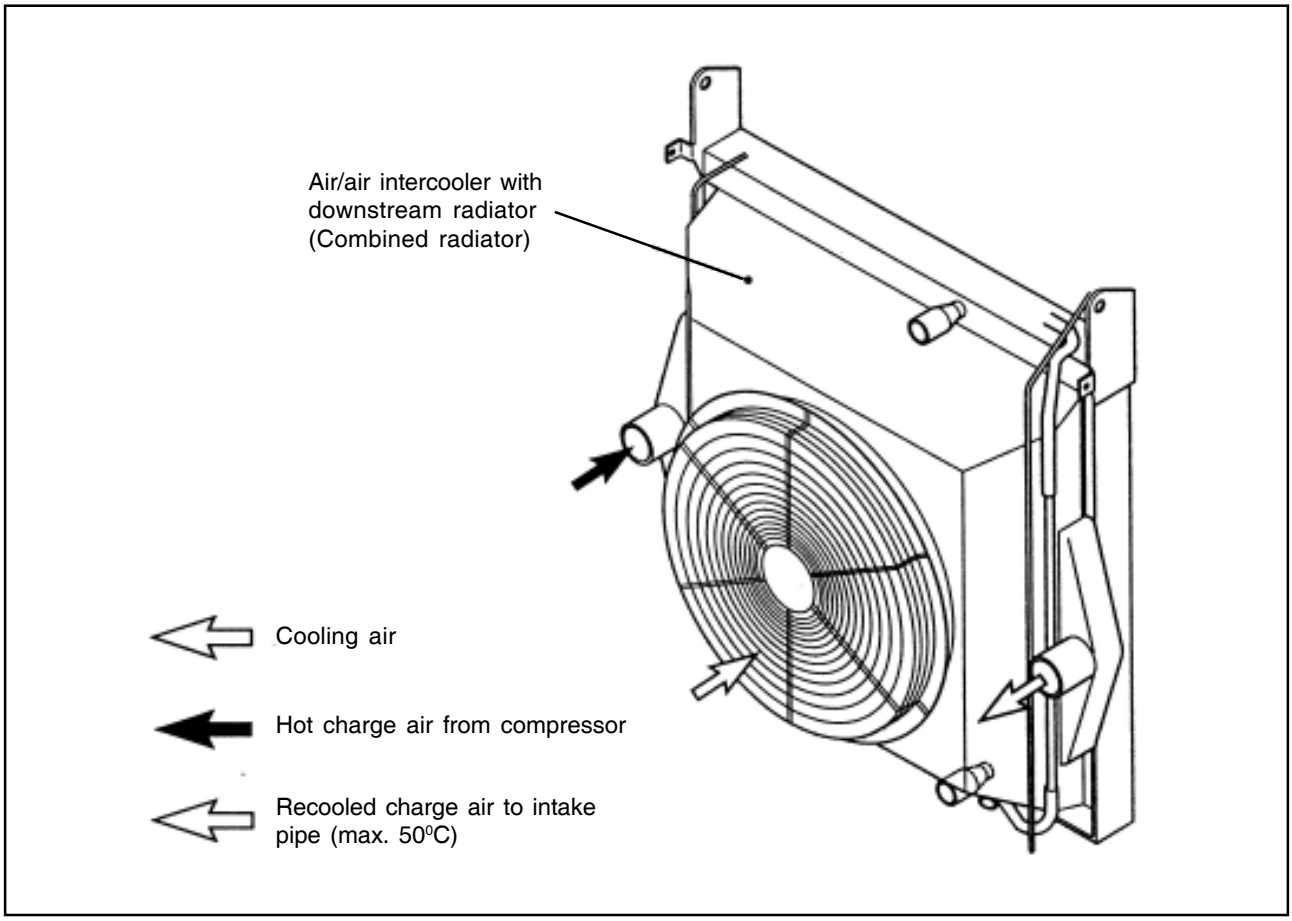

4.10 Cooling system

A properly designed and installed cooling system is vital to satisfactory engine life.

Engines using a liquid for cooling have jackets or passage around each cylinder and throughout the cylinder head. The coolant enters the jacket under pressure and on its way to the outlet absorbs heat from the engine. Liquid cooling systems are designed so that the engine inlet and outlet temperature differential is maintained at desirable level in the range of 8^0 C to 10^0 C. At the outlet the coolant enters a radiator comprising of small finned tubes. These fins provide a large surface area for transfer of heat from liquid to the air stream. The air stream is produced by a pusher type radiator fan which draws air over the engine and 'pushes' it through the radiator. The cooled liquid is then again re-cycled for engine cooling.

All diesel generating sets using liquid-cooled engines are provided with set mounted radiator, correctly matched with the engines to maintain the engine liquid temperature at the desired level. However, for correct functioning of the cooling system free flow of cool air to the radiator core and free flow of air away from the core must be ensured. Radiator and fan alignment is crucial for effective cooling system. Fan should be mounted completely inside the radiator shroud and should be flush with the shroud bore.

The figure below shows the schematic diagram of the cooling system.

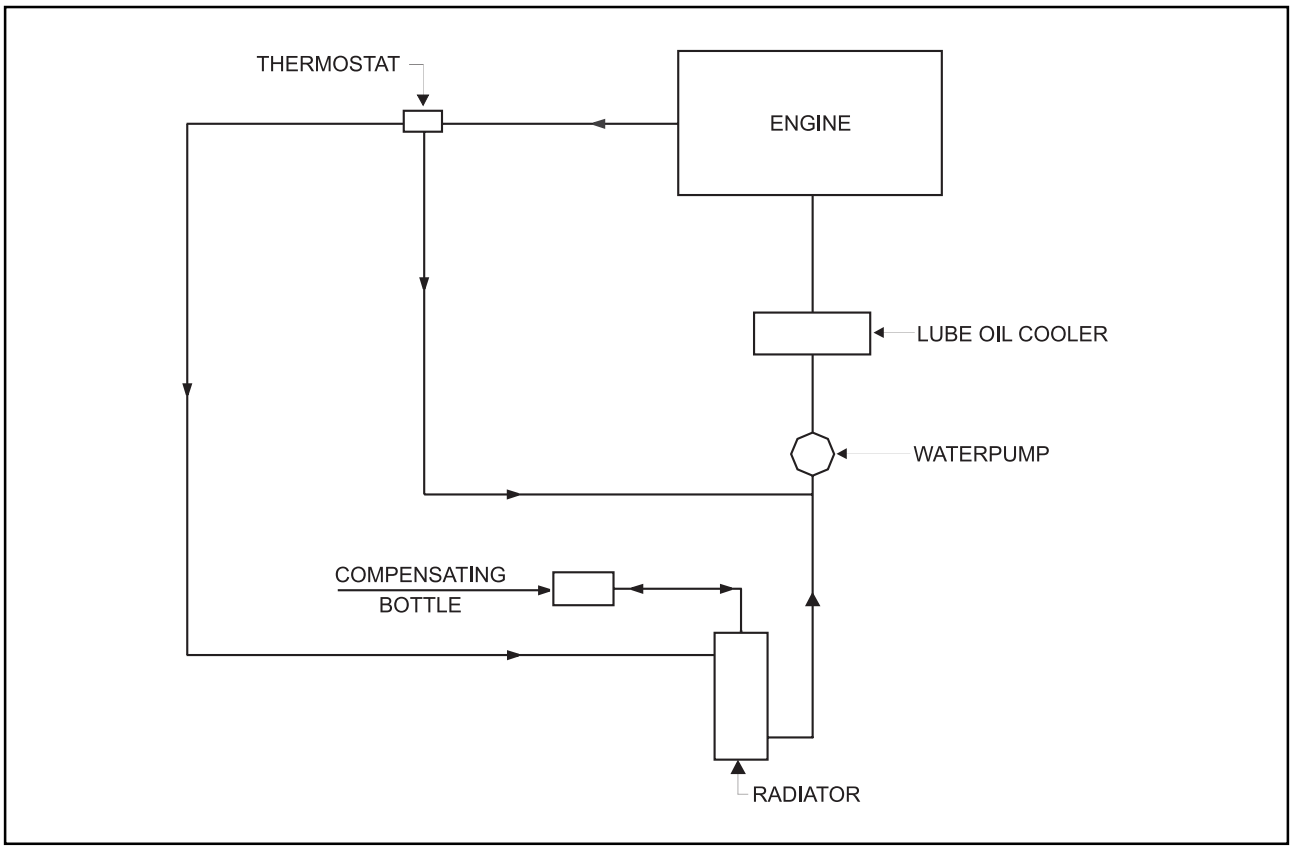

The cooling system consists of :

- Water pump
- Radiator
- Radiator Fan
- Thermostat
- Compensating bottle

It is recommended use K Cool Super Plus in cooling system.

4.10.1 Coolant pressure cap

Check the pressure valve opening pressure using a expansion tank cap tester. Replace the filler cap assembly if the measured valve does not reach the specified limit, (pressure valve opening pressure : 0.9 kg/cm^2)

Note : Because it is dangerous to open the pressure cap quickly when coolant is hot, after lowering the inside pressure of the tank by slow-opening at first open it fully.

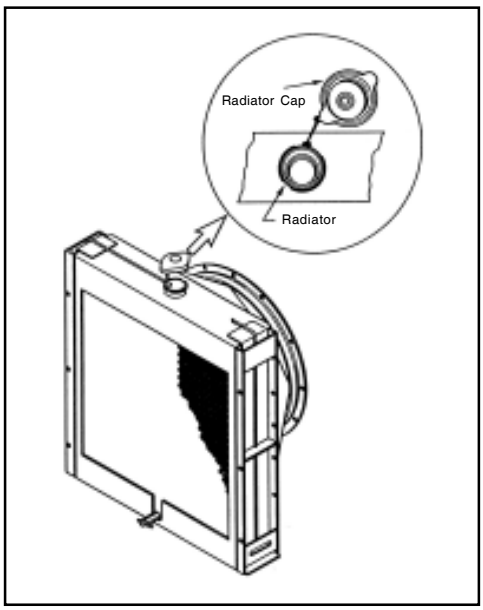

4.10.3 Water Passage For DV Series Engines

Water Passage From Waterpump To Lube Oil Cooler & Then To Header

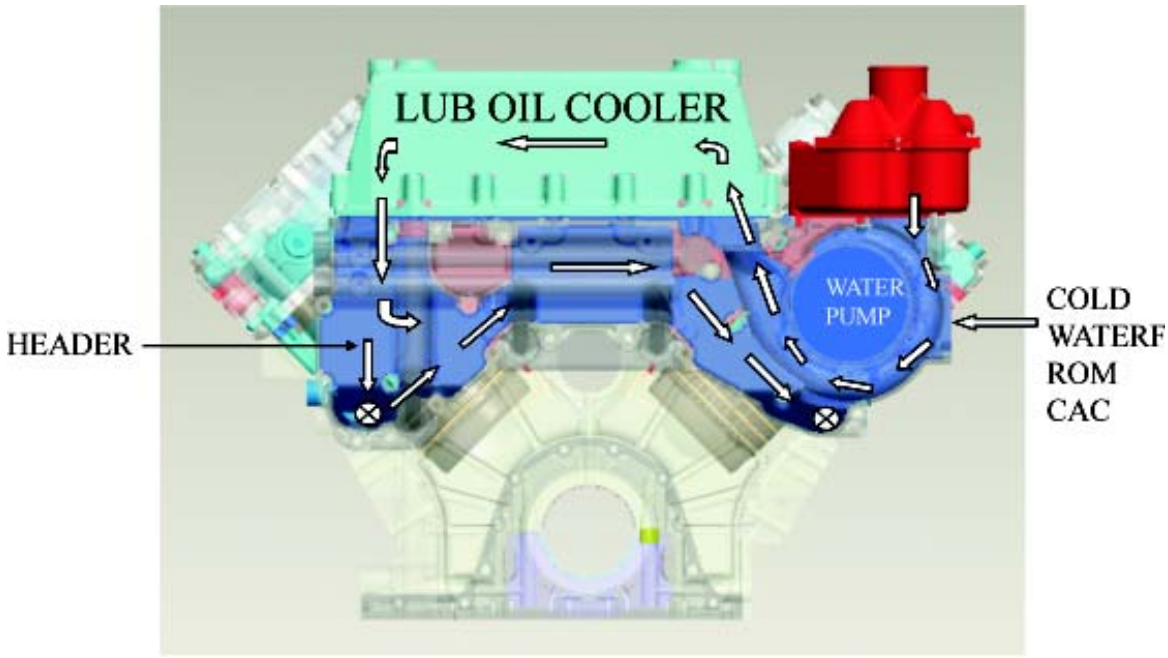

4.10.4 Water From Header To Crankcase & The To Liner - Right Side View

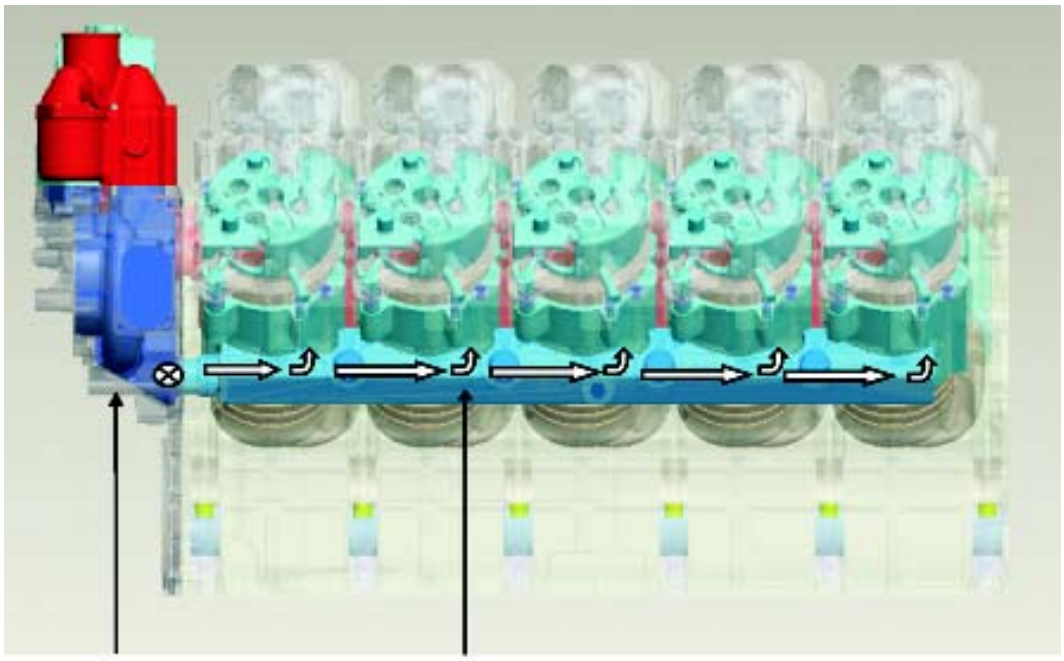

4.10.5 Water From Header To Crankcase & The To Liner - Left Side View

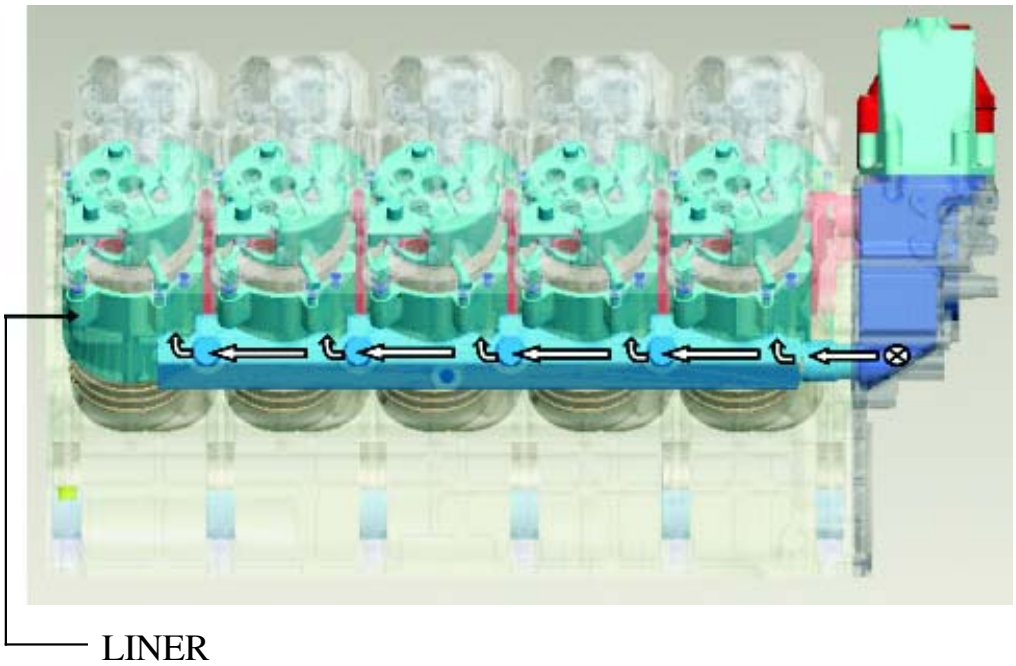

4.10.6 Water Passage From Crankcase To Liner, Liner To Cylinder Head & Then To Crankcase

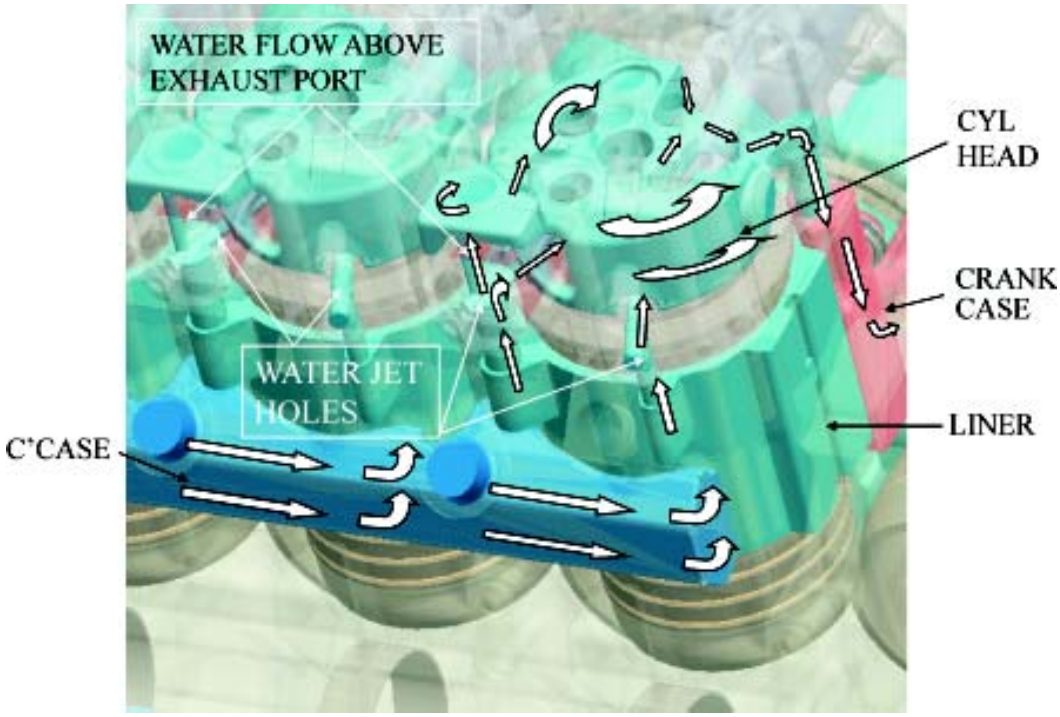

4.10.7 Water Passage From Crankcase To Header

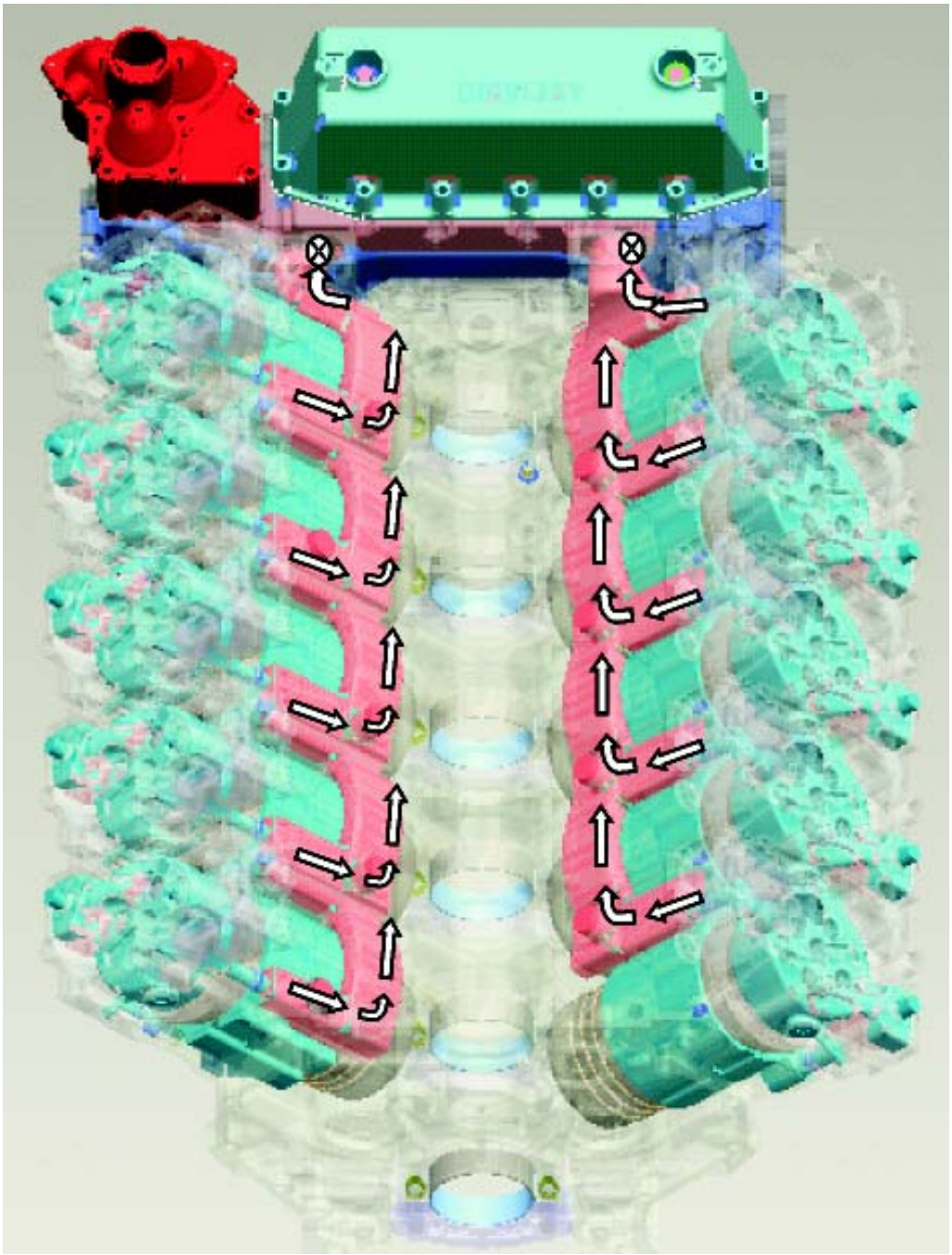

4.10.8 Water Passage From Header To Thermostat

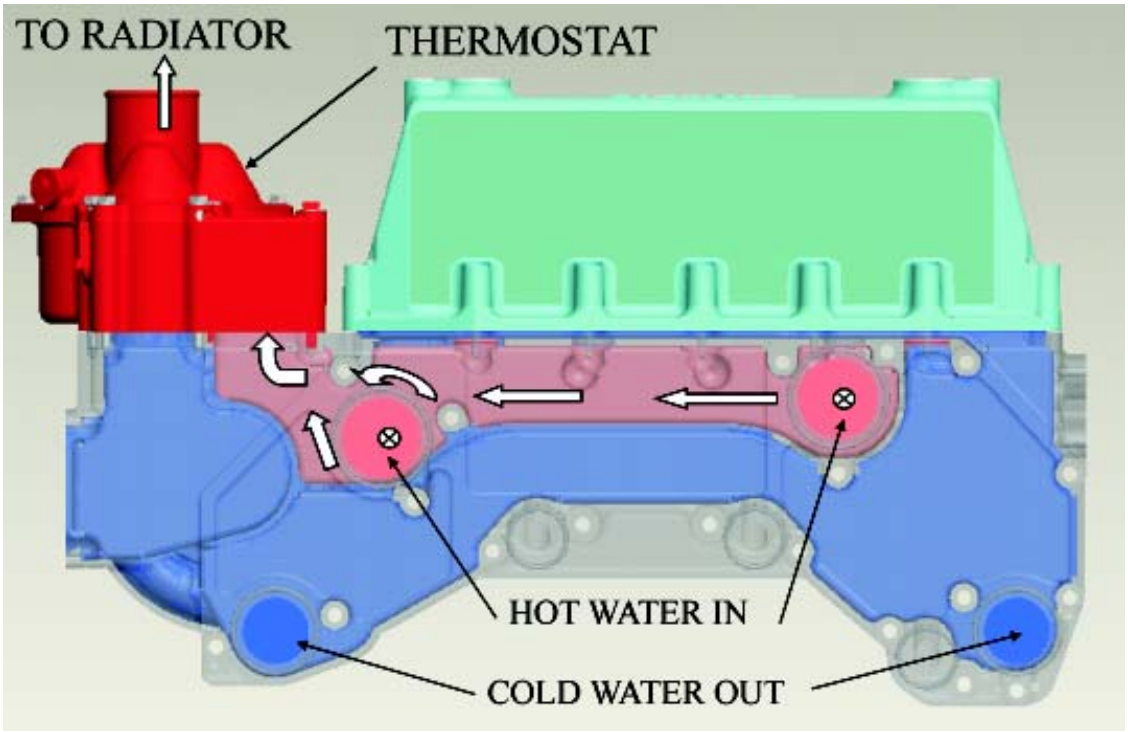

4.11 V-belt tension check and adjust

Check the V - belt tension pressing with thumb midway between the pulleys to see whether the belt deflects. The deflection should not be more than 10mm ~ 15mm, if necessary re-adjust the belt tension. For the adjustment of the tension, loosen the adjusting nuts which support the alternator, adjust the tension and tighten the nuts again.

Alternate method of checking belt tesion

To check the tension of the V-belts, use a tension gauge (see fig.)

- Place indicator arm 1 into gauge
- Position gauge on V-belt 2, midway between the pulleys, with flange 3 on bottom of gauge against the edge of belt.
- Push slowly on the black pad 4 at right angles to belt 2 until the spring is heard or felt to trigger.
- Carefully remove the gauge without altering the position of the indicator arm 1.

Read off the value where the black indicator arm 1 intersects scale 5 (arrow).

- If necessary, retension belt and measure again.

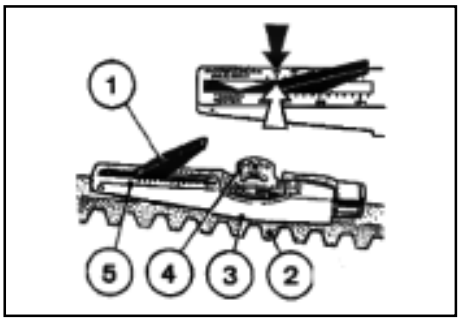

Note – Check tension and change belts only when engine is at standstill. Refit belt guard, if provided.

4.12 Turbocharger

The exhaust gases of the engine are passed through the turbine rotor of the turbocharger. Air compressor impeller mounted on the same shaft draws in fresh air and delivers it at a higher pressure to the cylinders.

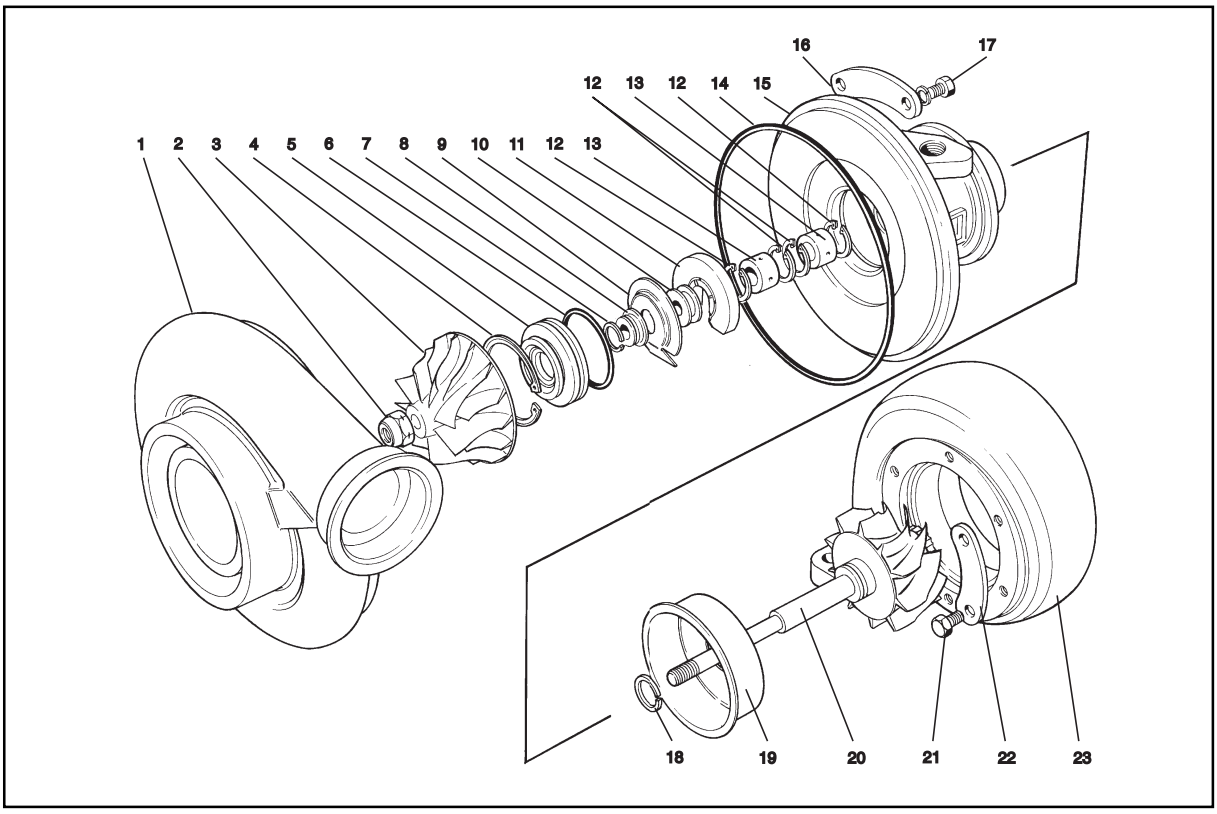

The turbocharger is naturally air-cooled. Lubrication of the main bearing is by oil under pressure from the engine lubricating system.

Part List

1. Compressor cover
2. Compressor locknut
3. Compressor wheel
4. Circlip
5. Insert
6. Insert O ring
7. Piston ring (Compressor)
8. Flinger sleeve
9. Oil deflector
10. Thrust sleeve
11. Thrust bearing
12. Journal bearing circlip
13. Journal bearing
14. Bearing hosing O ring (optional)
15. Bearing Housing
16. Clamp plate
17. Screw and washer assembly
18. Piston ring (Turbine)
19. Turbine backplate
20. Shaft and Turbine wheel
21. Setscrew
22. Clamp plate
23. Turbine housing

4.13 Electrical equipment

4.13.1 Alternator

The alternator is fitted with integral silicon rectifiers. A transistorized regulator mounted on the alternator body interior limits the alternator voltage. The alternator should not be operated except with the regulator and battery connected in circuit to avoid damage to the rectfier and regulator.

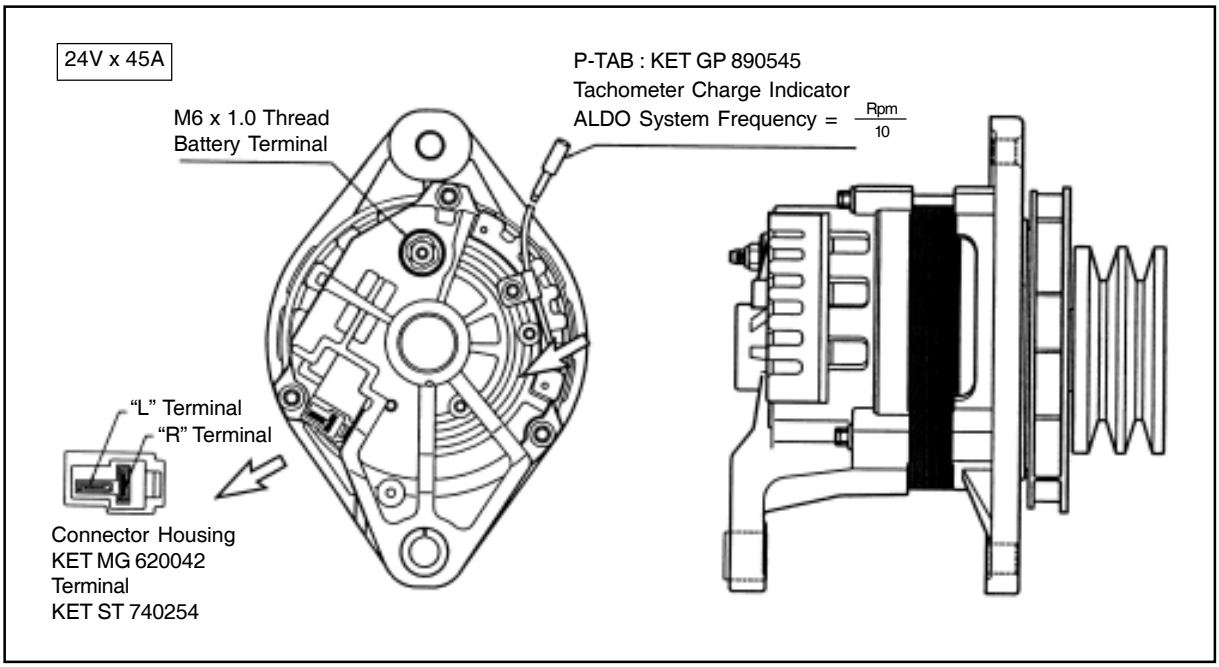

The alternator is maintenance-free, nevertheless, it must be protected against dust and, above all, against moisture and water.

Operate the alternator according to the instructions given in the chapter.

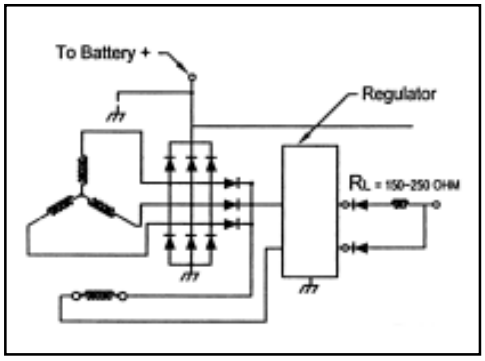

4.13.2 Starter motor

The sliding-gear starter motor is flanged to the rear of the flywheel housing on the left-hand side. As parts of every engine overhaul, the starter pinion and ring gear should be cleaned with a brush dipped in fuel and then a coat of grease should be applied again.

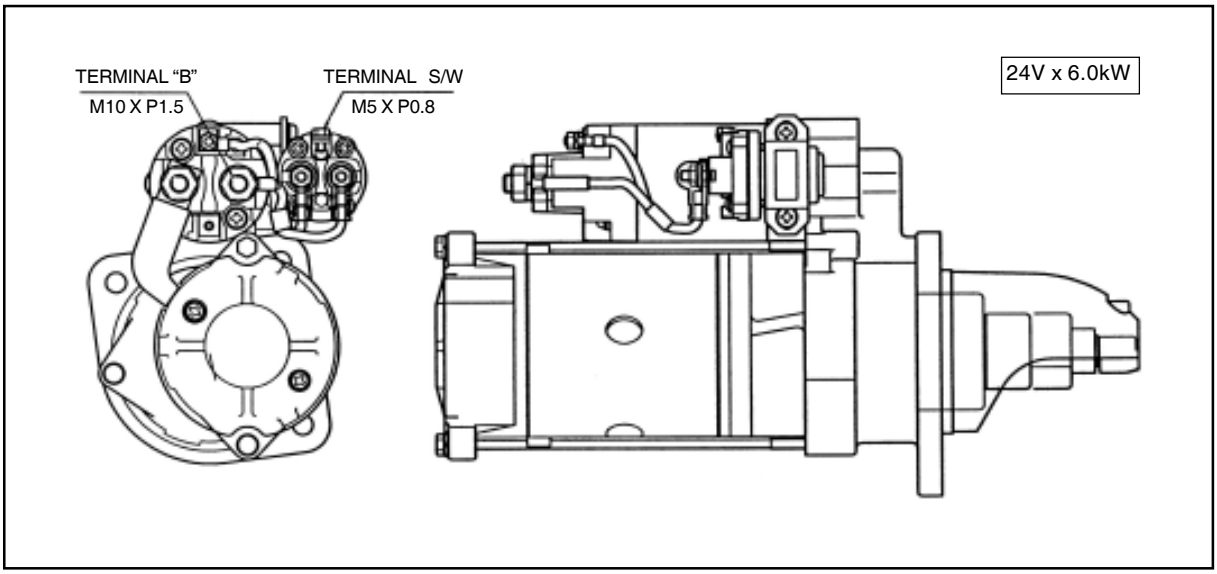

Always protect starter motor against moisture.

Warning : A/ways disconnect the battery earth cable before starting work on the electrical system. Connect up the earth cable last, as there is otherwise a risk of shortcircuits.

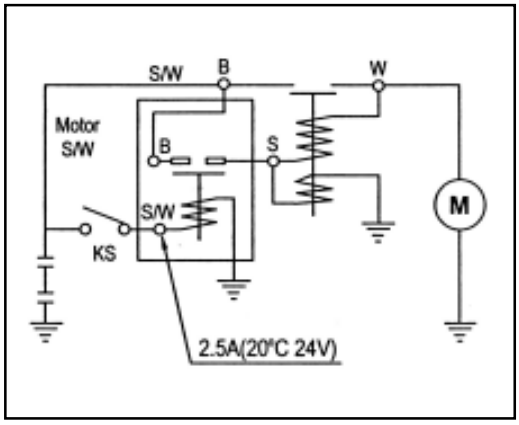

Battery : 24 Volts system (2 x 12 V) is used foe engine starting & engine controls.

Recommended Battery Capacity :

Ambient Temp. ^{0}C	Battery Capacity
Above +10 ^{o}C	2 x 180 Amp-hr
Below +10 ^{0}C	2 X 200 Amp-hr

For exterme low temp. i.e. below – 20 ^{0}C, refer to Kirloskar Dealer.

Battery Cable : 35 sq.mm copper cable upto 1.5 meter

70 sq.mm. copper cable above 1.5 meter

4.14 Engine Control Panel

4.14.1 Introduction

The KG907V1 is an engine controller that incorporates automatic start and stop sequencing, engine operating parameter measurement and display and engine protection, in a single integrated package.

An LCD display is used to show current operating mode, engine temperature, oil pressure, battery volts, fuel level, engine speed, and engine hours. Individual alarms are highlighted by independent high brightness LED's

The unit provides external auto start and emergency stop inputs, integrated manual start and stop buttons and automatic control of the battery charging alternator excitation. It is rated for either 12 or 24 volt operation and will operate from 6 to 36 volts.

For the varying demands of specific field applications the unit is highly configurable through an inbuilt menu system. The unit can be fitted with an optional RS485 or RS232 communications port for system expansion and may be used use with the KG8x family of power meters and KG92x AMF/ATS controllers.

By integrating all the required engine control functions in a single package, not only is system reliability improved but OE installation time and total system costs are minimised.

4.14.2 Functions

- Fully sequenced engine starting and stopping with clear LCD status messages.
- Selectable manual or automatic starting modes.
- Test mode with configurable runtime for ease of test compliance
- Displays current operating value, and provides optional protections for:
  - Oil pressure.
  - Water or Oil Coolant temperature.
  - Fuel level.
  - Canopy Temperature.
  - Engine speed.
  - Battery voltage.
  - Crank Minimum voltage
  - Coolant level status.
  - Charging status.
  - Engine running hours.
  - User analog input
- Message and Icon based warnings and alarms for:
  - Low oil pressure.
  - High engine temperature.
  - Low battery voltage.
  - Battery charge fail.
  - Over speed and under speed.
  - Coolant level.
  - Low Fuel.
  - Excitation Fail
  - High canopy temperature.
  - Belt break.
  - User analog input

- Outputs
  - Fuel control options ETR (Energise to run) or ETS (energise to stop).
  - Fuel Pull in output for 2 stage solenoid control.
  - Preheat output for engines in cold climates.
  - Contactor A output for removing the load from the mains.
  - Contactor B output for transferring the load to the generator.
  - General Alarm output indicating abnormal operation.
  - Seven totally isolated dry contact configurable outputs.
  - Excitation.
- Inputs (can be either N.C. or N.O.)
  - Trip input for optionally delayed external trip.
  - Emergency Stop input to immediately stop the engine or prevent it from starting
  - Separate analog and digital Oil Pressure inputs for analog sensors, and/or digital switches with selectable protection options.
  - Fuel level (both resistive and switch)
  - Engine temperature (both resistive and switch)
  - Coolant level low and very low
  - V Belt broken
  - Canopy Temperature options for KG08 temperature sensor or switch input
  - Auto Start input
  - User analog Input
- Mechanical
  - Front fixed by vibration proof rivets.
  - Standard 91 x 91 mm Din Standard cut-out.
  - Standard Molex Minifit connectors for low cost, simple tooling and reliability
  - IP65 from the front

4.14.3 Operation

Initial Power Up

On initial power up, the unit displays “Kirloskar Green Power Ideas” as a company logo. Then it displays Serial number, Application code and Software version.

If configured to maintain its mode during power down, it powers up in the same mode as last powered down. Otherwise it powers up in manual mode.

If this is the very first power up the mode will default to manual mode.

Standby

When the unit is in standby all measuring systems and display systems are turned off. However the unit wakes from time to time to check for any unusual conditions and if it finds none it goes back to sleep, otherwise it alarms accordingly.

Any activity on the Autostart or Emergency Stop inputs or front panel buttons immediately wakes the unit and the appropriate action is taken.

When “Ready” is shown on the LCD display, the unit is awake and if no action occurs for 1 minute the unit will go to sleep.

4.11.4 Mode Selection

The unit may be operated in Auto, Manual or Test modes.

In the Auto mode, the unit responds to the autostart input, Scheduler or Remote Starts and controls A and B contactors.

In Manual mode the unit responds only to the manual push button and may control A and B contactors if this option has been enabled.

In Test mode the engine responds only to the manual start button and runs for a preset test time if configured. Contactors are not controlled.

In all three modes the engine can be stopped with the Stop button.

The operating mode of the unit is selected by pressing the button. For each press of the button the mode of the unit is cycled round to the next mode. As the modes change the display shows the new mode and the appropriate mode LED is lit.

Manual Operation

To start engine manually

Select manual mode by pressing the button until the display shows MANUAL and the Manual LED is lit

Press the start button briefly when in “Ready”. The unit will perform the starting sequence as follows:

- PREHEAT. The Preheat output is energised (if selected) and the display shows “Preheat” with a countdown time
- FUEL-ON. If ETR (energise to run) fuel control is configured, the unit will control the fuel output and display “Fuel On”. For ETS (energise to stop) the sequence proceeds after a short delay to Cranking.
- CRANK. The crank solenoid is energised and the display shows “Cranking” with a countdown time. If the engine does not start then after a Stopping, the unit will return to Ready. If the unit looses power due to battery voltage droop, and the engine fires, then on restoral of battery voltage the unit will continue to allow the engine to run. The minimum battery voltage measured during the crank cycle is displayed as Vm
- RUN UP. When the engine starts, the display shows “Run Up” with a countdown for a few seconds. This allows the engine measurement system to stabilise. Only HIREV and loss of speed signal are checked during Run Up.
- IDLE UP. The engine is now running with the Idle output on (if configured). Oil Pressure, loss of speed signal, overspeed and HIREV are monitored.
- WARM UP allows the engine to stabilise at full speed before going on load. Oil pressure, overspeed and HIREV are monitored. The display shows “Warm Up” with a countdown time
- RUNNING. The display shows “Running”. Operating parameters are scrolled onto the display. “Manual” appears in the list indicating the engine was manually started.

To stop the engine manually

Push the button briefly. The unit will perform a stopping sequence as follows:

- IDLE DOWN. The engine runs at idle speed with a countdown time. Oil Pressure, loss of speed signal, overspeed and HIREV are monitored.
- STOPPING. The display will show “Stopping” with a countdown time.
    - o If ETR fuel control has been selected the Fuel output will be de-energised.
    - o If ETS fuel control has been selected then the Fuel output will be energised for the Max Fuel Time or until the engine stops. The Fuel Pull output will be energised for 1 second at the start of the Stop Hold time. The stopping process will retry if the engine fails to stop the first time. During the “ETS Rest” period the Fuel output is deactivated.

- o The fuel output is controlled until the engine stops rotating and oil pressure decays (Oil Pressure systems). If the Oil Pressure has not decayed by the end of the Max Fuel Time, the fuel output is deactivated and the controller waits until the oil pressure has decayed, or for the remainder of the Stop Time. The speed must remain at zero and the oil pressure must be below the alarm set point for the “Stop Rest Time” before the engine is considered stopped.
- o “Stop Failure” is displayed if the engine does not stop. The general alarm and “Fail to Stop” outputs are activated

- READY. The engine has stopped and is ready to start again as required.
- IDLE UP. The engine is now running with the Idle output on (if configured). Oil Pressure, loss of speed signal, overspeed and HIREV are monitored.
- WARM UP allows the engine to stabilise at full speed before going on load. Oil pressure, overspeed and HIREV are monitored. The display shows “Warm Up” with a countdown time
- RUNNING. The display shows “Running”. Operating parameters are scrolled onto the display. “Manual” appears in the list indicating the engine was manually started.

To stop the engine manually

Push the button briefly. The unit will perform a stopping sequence as follows:

- IDLE DOWN. The engine runs at idle speed with a countdown time. Oil Pressure, loss of speed signal, overspeed and HIREV are monitored.
- STOPPING. The display will show “Stopping” with a countdown time.
  - o If ETR fuel control has been selected the Fuel output will be de-energised.
  - o If ETS fuel control has been selected then the Fuel output will be energised for the Max Fuel Time or until the engine stops. The Fuel Pull output will be energised for 1 second at the start of the Stop Hold time. The stopping process will retry if the engine fails to stop the first time. During the “ETS Rest” period the Fuel output is deactivated.
  - o The fuel output is controlled until the engine stops rotating and oil pressure decays (Oil Pressure systems). If the Oil Pressure has not decayed by the end of the Max Fuel Time, the fuel output is deactivated and the controller waits until the oil pressure has decayed, or for the remainder of the Stop Time. The speed must remain at zero and the oil pressure must be below the alarm set point for the “Stop Rest Time” before the engine is considered stopped.
  - o “Stop Failure” is displayed if the engine does not stop. The general alarm and “Fail to Stop” outputs are activated
- READY. The engine has stopped and is ready to start again as required.

To start the engine automatically

Select manual mode by pressing the button until the display shows AUTO

Autostart Engine Control

If the Autostart input is activated, the unit will initiate an Autostart sequence. The sequence is similar to the manual start and stop sequences above with the following additions.

- An adjustable Start Delay follows the Autostart input activation. This is usually configured to avoid nuisance starting. The Display shows “Starting” with a countdown value. For long start delays, the start time units may be set to minutes. If the autostart restores for more than the Start Restore time, then the start sequence is aborted.
- The unit cranks the engine for the crank time or until the engine fires. If the engine does not fire after the crank time, then the unit will repeat the crank procedure after waiting for the crank rest time. This cycle is repeated for the “Crank Retries” and if the engine has not started after the last cycle, a “Fail to Start” alarm is generated.
- The Start sequence now follows the manual starting sequence until the engine is running.
- During an Autostart run the LCD displays Auto in the top left of the display.

  The stopping sequence is initiated by deactivation of the autostart input. The engine does not stop immediately as there are three additional states in the Auto stopping sequence.

- “Run On” follows “Running” and is a provided as an adjustable delay to reduce nuisance stopping. The Contactor A & B Outputs remain activated and the Display shows “Run On” with a countdown value.value. If the autostart input is re-activated during “Run On” the unit returns to normal “Running” until the Autostart input is deactivated.
- “Cool Down” follows “Run On” and allows the engine and/or generator to cool down before stopping. The cool time is adjustable. At the start of “Cool Down” the Contactor A & B Outputs are deactivated, transferring the load to the mains. The display shows “Cool Down” with a countdown. If the autostart input is re-activated during “Run On” the unit returns to normal “Running” and Contactor A and B are activated.
- “Idle down” follows “Cool Down”. The engine runs at idle speed for the idle down time. If the autostart input re-activated during Idle Down, then the unit returns to the Warm Up state and continues its starting sequence from there in the normal manner.

  Pressing the Stop button in auto mode stops the engine immediately, deactivates the Contactor A & B Outputs, and changes the mode of the unit to Manual.

4.11.5 Display Operation

When the engine is running

When the engine is starting and stopping, the display shows the state of the engine sequence together with the time before the next state will commence.

Once the engine is fully running or if the engine is stopped and in “Ready”, the engine parameters are displayed. The unit sequentially scrolls through each screen in sequence.

Display screens are as follows:

Hertz (If enabled)		RPM
Oil Press	Engine Temp	Battery Volts

Canopy Temp (if enabled)	Fuel level
Engine Hours	Crank Min Volts (Vm)

Remote/Auto/Manual/Sched		Running
Analog User Text	(if enabled)	xxxx

If warnings are present, the associated messages are included in the scroll list, and are interleaved with each status display.

A typical Warning display is as follows:

Warning
Excitation Fail

4.11.6 Load Transfer and Contactor Operation

Contactor control will always occur in Auto mode, or in Manual mode if Man Mode Con is set to Yes.

Once the engine is warmed up and running, the unit will attempt to transfer the load to the generator.

In the Delay mode, the A contactor will unload when the delay time expires or when the engine is running, which ever occurs first. In Immediate mode, the A contactor will unload immediately.

The B Contactor is loaded after a short delay “Xfr Delay” once the A contactor is unloaded and the engine is in “Running” mode.

At the beginning of “Cool Down”, the B Contactor is unloaded and the A contactor is loaded after a short delay “Xfr Delay”.

In Manual Mode

Contactor A may be controlled asynchronously from the running of the engine, in response to activity of the auto start input.

If “Man Mde Con” is set to Yes, then Contactor A will be unloaded when the autostart is active, and loaded when the autostart restores. The Unload delay is set by the Con A Unload Dly time. The Load delay is set by the StartRestore time. This is to protect the A Contactor or the load from damage if mains voltages are low.

A and B Contactors are also controlled when the engine is run manually if “Man Mde Con” is set to Yes. Contactor A unloads at the start of Running

If the engine is started in Manual Mode, then Contactors A & B will operate as they do in the Auto mode.

4.11.7 Scheduler Operation

The unit allows the genset to be run at scheduled times for a specified duration. The scheduler runs independently, but will only start when the unit is in the Auto Mode.

When the engine is running in Scheduler mode, the display shows “Sched” as its mode and a remaining time in minutes.

If the load is to be transferred to the generator during a scheduled run, then the Sched Trans value should be set to yes.

If the Scheduler requires the engine to be run when the unit is in test mode or manual mode, a Scheduler warning is initiated. To run the engine in its scheduled mode, the engine must first be stopped with the manual stop button. Once the engine has stopped the mode is changed to Auto with the mode button. This will cause a Scheduler Lockout warning to occur. Pressing the start button will initiate the schedule and start the engine. The engine will display “Sched” as its running mode.

If the Scheduler requires the engine to be run when the unit is running in auto mode, the engine will keep running until the schedule run time has passed, and the autostart has restored. The scheduler will reset for the next run time as normal.

If the scheduler requires a non loading schedule while running in Auto, the schedule will take over once the Auto Start is deactivated

If the unit is in manual or test mode when a scheduled run is required and is set to Auto mode half way through the schedule period, then the engine will run for the remaining schedule time.

4.11.8 Alarms and Warnings

In the event of abnormal operating conditions the unit will issue a warning or an alarm and shut the engine down as required. The LCD shows an appropriate message indicating the nature of the condition. To draw operator attention to the condition the flashing general alarm LED is used.

Alarms will generally shut the engine down. Warnings are given for less severe situations which by themselves will not damage the engine but may cause future malfunctions.

In general, alarms are not self-resetting. They are reset by pressing the stop button or the alarm button once the engine has stopped.

The following alarm icons are displayed

	**Speed Icon** For an over or under speed warning the speed icon flashes quickly. The alarm LED flashes and an appropriate message is displayed on the LCD. For over and under speed alarms, the speed icon is lit. The alarm LED flashes and the engine is shutdown. An appropriate alarm message is displayed on the LCD. If the engine is about to start and is currently in the start delay period then the speed icon flashes slowly. Similarly if the engine is running in cool down and about to stop, the speed icon flashes slowly
	**Low Oil Pressure Icon** The low oil pressure icon flashes red as a warning if oil pressure is below the low oil pressure warning set point while the engine is running. The engine remains running. The icon is supplemented with an LCD message. If the oil pressure is below the shutdown set point, the icon is lit and alarm LED flashes. The engine is shutdown. The icon and alarm are supplemented by an LCD message. If the oil check before cranking is enabled, and the check indicates oil pressure may be present, the icon LED flashes slowly. If the oil sender goes open circuit, the icon flashes and the alarm icon is lit. The icon and alarm are supplemented by an LCD message.
	**High Engine Temperature Icon** The high engine temperature icon flashes red as a warning if the temperature being measured is above the temperature warning set point while the engine is running. The engine remains running. The icon is supplemented with an LCD message. If the temperature goes above the shutdown set point, the icon is lit and alarm LED flashes. The engine is shutdown. The icon and alarm LED are supplemented by an LCD message. If the temperature sender fails, then the icon flashes and the alarm icon is lit. The icon and alarm are supplemented by an LCD message.
	**Battery Warning Icon** Battery charging problems do not shut the engine down. Indications are warnings only. The battery warning icon flashes slowly if the battery voltage is below the low battery set point while the unit is in READY or standby. This usually indicates the battery needs charging or the external charger has failed. If the battery-charging alternator fails to excite during engine running the icon LED is solid red. If the battery fails to reach the charging voltage during running the icon LED flashes slowly. This usually indicates a failed battery or failed alternator. In each of these cases the LCD displays appropriate warning messages.

	**Low Water Level Icon** The low water level icon flashes red as a warning if the water level in the radiator is low. The engine remains running. The icon is supplemented with an LCD message. If the water level is very low the icon is lit and alarm LEDs flash. The engine is shutdown. The icon and alarm are supplemented by an LCD message.
	**Low Fuel Level Icon** The low fuel level icon flashes red as a warning if the fuel level is low. The engine remains running. The icon is supplemented with an LCD message. If the fuel level is very low both the icon is lit and alarm LED flashes. The engine is shutdown. The icon and alarm are supplemented by an LCD message.
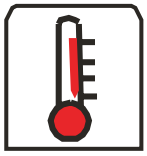	**High Canopy Temperature Icon** If there is an unacceptably high canopy temperature the engine will shutdown and the icon is lit in conjunction with the general alarm LED. The alarm will be supplemented by an LCD message. If the canopy temperature sender goes open circuit, the icon flashes and the alarm icon is lit. The icon and alarm are supplemented by an LCD message.
	**Belt Broken Icon** If the belt breaks the engine will shutdown and the icon is lit in conjunction with the general alarm LED. The alarm will be supplemented by an LCD message.

4.11.9 Speed Sensing.

The unit can obtain speed information from one of four sources.

- Magnetic pickup unit
- Battery charging flywheel magneto
- Generator output 50/60Hz if used for genset control
- Battery charging alternator

The unit requires the entry of a value into “Cal Value”, which defines the number of pulses seen by the speed input over 10 engine revolutions.

The actual speed input frequency, wherever it is derived from, may be displayed by setting the “Display Hz” option in the Engine column to “On”. This allows the set up engineer to read the sensed frequency and derive the values required for the speed setting items below.

For example, assume the speed source is MPU and the engine runs at its normal speed of 1500 RPM, The Hz display shows 1202 Hz.

Therefore the number of pulses per minute is 1202 X 60 = 72120.

The number of pulses per revolution is 72120/1500 = 48.08.

Therefore pulses per 10 revolutions are 480.

Note that the 0.08 can be ignored since this is probably due to the engine running very slightly faster than 1500 RPM.

Once the correct setting has been derived, the “Display Hz” item can either be set to “2P” for engines rotating at 3000 RPM (at 50 Hz)and fitted with a 2 pole generator, or “4P” for engines fitted with a 4 pole generator and operating at 1500 RPM (at 50 Hz) giving a frequency display. The item can also be turned off if no display is required.

MPU

The magnetic pickup unit usually counts teeth on the flywheel and is mounted in the bell housing. It is important to ensure the gap between the MPU face and the teeth is 1mm to 2mm, as this distance greatly affects the output of the MPU. The unit requires a minimum of 1.2V RMS at low speed to ensure proper crank disconnect. Setup requires the calculating the number pulses per 10 revolutions. The calculated number is entered into the menu system “Cal Value”.

Calculate : Number of Teeth x 10 = Speed Pulses Per 10 Revolutions.

Eg: 125 teeth x 10 = 1250.

Enter the number 1250.

Battery Charging Alternator

A low cost speed source can be derived from the battery-charging alternator if fitted. It unfortunately is also the most troublesome, and not recommended for reliable and repeatable long-term service. The difficulties arise from the in-exact relationship of alternator output frequency and engine RPM. As a result of slippage and variable mechanical coupling both calibration and long-term stability are compromised.

The ratio of crank pulley to alternator pulley is indeterminate, as it depends very significantly on where the coupling belt rides in the V grove. Belt tension plays a very significant role, as does belt wear and instantaneous belt loading.

Immediately after starting an engine the alternator is required to re-charge the partially discharged battery. The loading on the alternator is very high and belt slippage is common as is belt set low in the V groove. The output frequency may be lower than expected. If speed calibration is performed at this time, the speed representation will be too low and subsequently as the load reduces on the alternator, the engine speed will appear to erroneously increase.

For setup the number of pulses per 10 revolutions must be calculated and entered into the menu system “Cal Value”. The battery charging alternator output frequency and current RPM must be known. This is achieved by independently running the engine, and measuring the battery charging alternator frequency on the W (sometimes D+) terminal. Excitation must also be provided to ensure self-excitation and an adequate output signal. Some small variation in reported speed may result but this can be calibrated out later during engine commissioning.

Calculate Speed Calibration value as follows:

Cal Value = (Freq x 600) / RPM.

Eg: (257Hz x 600) / 1500 = 102.8.

Enter the number 103.

4.11.10 Battery Charging Alternator Excitation

The battery charging alternator excitation system is implemented using a burst mode pulse controlled system. This ensures reliable self-excitation while managing current consumption during standby, heat dissipation during fault conditions, and flashing the battery-charging alternator prior to cranking for improved speed signal output.

During standby and READY, the alternator excitation is pulsed once per minute to maintain some level of residual magnetism in the alternator but still maintaining minimum power consumption. On receiving a start signal, the unit pulses the alternator excitation input with a burst of 200mA pulses. The pulse width is dependent on the battery voltage. This pulse burst establishes a definite magnetic field in the battery-charging alternator prior to cranking. This ensures a significant speed-sensing signal is generated for crank disconnect sensing. The alternator excitation is turned off and the engine is cranked without the usual alternator burden loading the cranking process. This ensures easier starting. When the engine has fired and is running, more 200mA pulse bursts are applied, which will ensure that the alternator is excited. Given the alternator is rotating at more than the 3000-RPM the alternator will achieve self-excitation.

If self-excitation is not achieved this process will repeat for a few seconds before the excitation failed warning is given.

Alternator excitation may also be used as a secondary crank disconnect signal for the case where the speed signal has failed immediately the engine starts to run. This feature can be disabled if not required by setting “Excite Dis” to No.

For systems where a battery-charging alternator is not fitted turning off the excitation warning can disable the excitation system.

Battery Voltage Monitoring and Charging Detection

A battery is considered charged if (assuming a 12V system.x 2 for 24V) its terminal voltage is above 13.1Volts. Typically a fully charged battery has a terminal voltage of 13.6V. Above this and the battery is being overcharged. During cranking the large discharge current will reduce the battery terminal voltage below 12.5V. The battery cannot increase the terminal voltage again without the assistance of a charger. This sequence provides a useful mechanism to determine if a battery is being actively charged.

Many applications have a current meter to show charging current. Such meters provide very limited value as a good battery will recover its terminal voltage very quickly and then be maintained with a very low level of trickle current. This trickle current is usually too small a percentage of the current meters range to provide any useful information.

The unit constantly measures the battery terminal voltage and can detect proper charging and discharging performance. Voltage readings are taken and compared against an inbuilt voltage profile. If the battery terminal voltage falls outside the critical voltages for each action then a battery warning is indicated.

During standby, and particularly where an on line charger is not available, monitoring the health of the battery is vital. The unit regularly wakes and measures the battery voltage, If it falls below the set point it gives a warning to ensure the operator is aware of the need for battery recharging.

4.11.11 Trouble shooting

The unit displays the following messages when an alarm occurs. Alarms shut down the engine, set the alarm output and flash the alarm indicator. The alarm indications are cleared when the stop button is pressed after the engine has stopped.

Message	Cause
Low Oil Pressure	Oil pressure has not reached the Oil Alarm set point (Oil Alarm) at the end of the run up time or has dropped below this value when the engine is running. The Oil Icon turns on
Low Fuel Level	Fuel level is less than the minimum value set point.
High Engine Temp	Engine temperature has exceeded the high temperature set point. The temperature icon turns on. This message may also be shown as “High Water Temperature” depending on temperature system setup.
Low Water Level	Water Level is below the water level very low level.
Under speed	Engine speed has dropped below the under speed set point. The speed icon is lit.
Over speed	Engine speed has exceeded over speed set point. The speed icon is lit.
High Rev	Engine has exceeded safe operating speed. The speed icon is lit.
No Speed Signal	Engine has lost speed signals while running
Start Failure	The engine has failed to start
Stop Failure	The engine has failed to stop
E-S Lock out	The emergency stop input has stopped the engine
Trip Alarm	The external delayed trip input has stopped the engine

Oil Pressure Flt	The unit has detected that the Oil Pressure sender has become open circuit. Normally this indicates a faulty sender or broken wiring. The Oil Pressure icon flashes. This will only shut down when the Oil System is set to Sender.
Engine Temp Flt	The unit has detected that the engine temperature has not risen to 50 degrees within the first 5 minutes of running or the temperature sensor has shorted to common. Normally this indicates a faulty temperature sender or broken wiring. The Temperature icon flashes.
High Canopy Temp	The unit has detected a high canopy temperature. The canopy temperature icon is lit.
Belt Broken	The unit has detected a broken belt. The broken belt icon is lit.
User Message	The user has detected an alarm associated with the user analog input

The following warning messages indicate potential problems. When a warning occurs, the message associated with the warning is displayed. Warnings clear automatically when the warning condition is cleared.

Message	**Cause**
No Excitation	Excitation voltage is low when engine is running. This indicates a probable charging fault or broken belt. The battery Icon is lit.
Low Charge Volts	Battery Voltage is below the charging voltage setpoint when the engine is running. Indicates that the alternator is not charging the battery. The battery icon flashes.
Under Voltage	**Battery Voltage is below the low battery setpoint. The battery icon flashes.**
Over Voltage	Battery Voltage is above the high battery volts setpoint. This may be due to a faulty regulator or battery charger. The battery icon flashes.
Trip Alarm	The trip input is preventing the engine from starting. The trip input must be deactivated followed by pressing the stop button to clear the condition.
Oil Lock Out	The unit has detected that the oil pressure is above the oil pressure alarm setpoint with the engine not running. This warning prevents the engine from attempting to crank with the engine potentially running. This may be due to a faulty oil sender or a very tight engine. This warning is disabled if Oil Pressure Check before Cranking is set to Off. The Oil Pressure icon flashes.
Tacho Lock Out	The unit has detected that a speed signal is present with the engine not running. This warning prevents the engine from attempting to crank with the engine potentially running. This warning can sometimes be caused by ripple generated by mains powered battery chargers. The speed icon flashes.
Excite Lock Out	The unit has detected that a Excitation is present with the engine not running. This warning prevents the engine from attempting to crank with the engine potentially running. This warning can sometimes be caused by ripple generated by mains powered battery chargers. The Battery icon flashes.
Scheduler Lock Out	The scheduler want to exercise the engine, but is being prevent to do so. This may be due to an alarm stopping the engine while the scheduler was running it. It may also be due to changing from Manual mode to Auto mode while the scheduler is active

AutoStart On	The unit has detected an Autostart signal when not in auto mode,indicating the engine needs to be started in Auto mode.
Scheduler On	The unit has detected that a scheduled run is due when not in auto mode,indicating the engine needs to be started in Auto mode.
Low Oil Pressure	The Oil Pressure has dropped below the Oil Pressure Warning set point while the engine is running. The Oil Pressure Icon is lit.
High Engine Temp	Engine temperature has exceeded the high temperature warning set point. The temperature icon is lit.
High Canopy Temperature	Canopy Temperature has exceeded the high canopy temperature setpoint after the Temperature monitoring delay has expired.
Low Fuel Level	Fuel level is less than the warning set point.
Fuel Level Flt	The unit has detected that the fuel sender is open circuit. This is only a warning, and will not shut down the engine
Can Temp Flt	The unit has detected that the canopy temperature sender is open circuit or has shorted to common.
No Speed Signal	A speed signal could not be detected after the engine had started
Maintenance	The time since the last maintenance has exceeded the maintenance time. The alarm output is not activated for this warning. The maintnenace Output (if configured) is activated. The warning is cleared by pressing and holding the button for 30 seconds. If the engine maintenance is carried out prior to the timer expiring, pressing the button for 60 seconds will reset the timer.
User Message	The user has detected a warning associated with the user analog input

4.11.12 Communications

The unit is fitted with a fully functional communications port, which communicates using Modbus ASCII protocol. This port may be plugged into RS232 or RS485 communication adaptors and through these to a modem or a multidrop network.

4.11.13 Alarm Dial Out

The unit can be configured to dial out to an KG PowerLink application when an alarm is activated.

Before the dial out can function, the unit must have some Phone Numbers setup by either KG PowerLink or KG PowerConfig applications. These values cannot be edited locally via the menu.

Alarm dial out requires the use of an RS232 interface connected to a modem.

4.11.13 Specifications

Feature	Specification
Overall Dimensions	110 x 100 x 60mm
Mounting Hole	96 x 96 mm
IP rating	IP66 front, IP55 rear
Supply Voltage	6 V to 36V DC Nominal 12V or 24V Automotive
Supply Current	Standby < 7mA Running 100mA TBA

Speed Input Sensitivity	0.5 - 350 Volts Pk
Input reference	0 volts common
Speed Frequency Range	10Hz – 20KHz
Displayed speed range	0 – 9999 RPM
Engine Hours	0 – 99999.9 Hours
Oil pressure sensor type	Switch: close on fault, open on fault Resistive 10 to 180 Ohms (VDO/Datcon) Resistive 0 to 90 Ohms (Pricol/Datcon) User Curve
Oil Pressure range	500, 750, 1000 KPa
Engine Temperature sensor type	Switch: close on fault, open on fault Resistive (NTC)
Engine Temperature range	120ºC, 200ºC, User Curve
Canopy Temperature sensor type	Switch: close on fault, open on fault Resistive (NTC)
Canopy Temperature range	KG907 supplied unit, User Curve
Fuel Level Sensor type	Switch close to Fault, open on fault. Resistive 0 to 90 Ohms Resistive 10 to 180 Ohms User Curve
Battery Volts measurement	6 to 40 Volts
Outputs	3 Amp Contact (24 volt resistive) switching to common
HET, LOP, Fail to Start, Low	3 Amp Contact (24 volt resistive) switching to isolated common Fuel outputs
Con A, Con B	NO/NC Isolated 3 Amp with 230V rating
Set-up and Adjustment	All features may be adjusted using set-up buttons and LCD menu.
Terminations	Amp DUAC / Molex Mini Fit JNR

5. Commissioning and Operation

5.1 Your engine needs preparations before starting

At the time of initial commissioning of a new or overhauled engine and before daily starting of the engine,

- Check the fuel, coolant and oil level, replenish if necessary.

  The notches in the dipstick indicate the highest and lowest permissible oil levels.

  The technical specifications for fuel, oil and coolant are specified in the “Technical Information” section.

- Check electrical connection and battery terminals
- Look for leakages around the engine - fuel, oil.
- Check condition of belts
- Check Cleanliness

  Ensure utmost cleanliness when handling fuels, lubricants and coolants.

- Perform specified daily maintenance.

5.2 Running-in

5.2.1 Operation of a new engine (break-in)

All engines require some operational period for sliding surfaces like pistons, rings and liners to take seat. During this period, the surfaces are taking shape and are conforming to each other. There is a possibility of oil film breakage under high load or under high speed due to high spots. Therefore the following precautions need to be observed for every engine.

Precautions during first 150 hours of operation

- Engine should be run at rated rpm with 25% load until the temperature of the engine comes to normal operating condition.
- Overload, continuous full load operation and continuous no load operation should be avoided.
- Abrupt start and stop of the engine should be avoided.
- Engine load should not exceed 70% of its prime rating.
- Maintenance and inspection must be accomplished thoroughly.
- Carry out 50 hour maintenance and replacement thoroughly.

5.2.2 Check points for running-in

During the running-in (the initial running of the engine) period,

- Check engine oil level frequently. Maintain oil level in the safe range, between the “min.” and “max.” marks on dipstick.

Note:

If you have a problem getting a good oil level reading on dipstick, rotate dipstick 180° and reinsert for check.

- If engine trips because of Low Lub Oil pressure (this will be indicated by a lamp), check oil level on dipstick. If required, add oil to the oil pan. Do not overfill. If level is correct then reset the fault by key switch on safety unit. If the status still exists, see your DEALER for possible switch or oil pump & line malfunction.

Note:

Oil pressure will rise as RPM increases, and fall as RPM decreases. In addition, cold oil will generally show higher oil pressure for any specific RPM than hot oil. Both of these conditions reflect normal engine operation.

- Check the coolant level on indicator located on balance water tank. If level is low then top up to the "High" level mark.

  If engine trips due to High water temp (this will be indicated by a lamp on engine control panel), check the water level, check the high water temp switch & wiring.

- Check battery charging
- Check leakages if any and rectify
- Maintain log book.

5.2.3 During Operation

Do not overload the engine. Do not exceed the maximum permissible engine tilt. If faults occur, find their cause immediately and have them eliminated in order to prevent more serious damage!

During operation the oil pressure in the engine lubrication system must be monitored. If the monitoring devices register a drop in the lube oil pressure, switch off the engine immediately. The coolant temperature should be approx. between 80 to 95 °C. The battery charge indication on safety unit should go off when the engine is running.

1) Charging Alternator

In order to avoid damage to the alternator, observe the following instructions while the engine is running

- Do not disconnect the battery or pole terminals or the cables
- If during operation, the battery charge lamp suddenly lights up, stop the engine immediately and rectify the fault in the electrical system
- Do not short-circuit the connections of the alternator with those of the regulator or with ground, not even briefly bringing the connections into contact

5.2.4 Shutting Down

Cut off the main circuit breaker of the generator control panel to "stop" After the engine has been running at a high load level, do not shut it down immediately but allow it to idle about 5 minutes jso that temperatures are normalized and turbocharger cools down. Switch off the key to stop the engine. Check if there is any abnormal noise from turbocharger during shutting down.

CAUTION:

Ensure that the engine is not started by any unauthorized person.

6 Maintenance and care

6.1 Periodical inspection and maintenance

In order to Insure maximum, trouble-free engine performance at all times, regular inspection, adjustment and maintenance are vital.

- Daily inspections in below figure should be checked every day.
- The maintenance should be executed thoroughly at regular internals, (refer to appendix “General Engine Inspection Cycle”.)

6.2 Lubrication system

6.2.1 Exchanging of lubrication oil

Engine oil and the oil filter are important factors affecting engine life. They affect ease of starting, fuel economy, combustion chamber deposits and engine wear. Refill and drain oil pan every 50 hours of operation or 6 months whichever occurs first. At the end of the break-in period (50 hours), change the oil sump oil and replace the oil filter. Be sure to fill oil in the filter during replacement.

6.2.2 Oil level

Check the oil level in the engine sump daily with a dipstick.

- The notches in dipstick must indicate the oil level between the max. and the min. permissible.
- The oil level should be checked with the engine horizontal and only after it has been shut down for about 5 minutes.
- Examining the viscosity and the contamination of the oil smeared at the dipstick replace the engine oil if necessary.

  Caution : Do not add so much engine oil that the oil level rises above the max. marking on the dipstick. Over lifting will result in damage to the engine.

6.2.3 Oil exchange procedure

While the oil is still hot, exchange oil as follows:

- Take out the oil dipstick.
- Remove the drain valve from oil pan and the drain plug form oil filter head, then drain out the engine oil into a container.
- Reassemble the drain valve with the oil pan and the drain plug with oil filter head after draining out the engine oil.

Refill with new engine oil at the oil filler neck on the head cover and the lubricating oil in accordance with the oil capacity of the engine through oil filler. Be careful about the mixing of dust or contaminator during the supplement of oil. Then confirm that oil level gauge indicates the vicinity of its maximum level.

- For a few minutes, operate the engine at idling in order to circulate oil through lubrication system.

Thereafter shut down the engine. After waiting for about 10 minutes measure the quantity of oil and refill the additional oil if necessary.

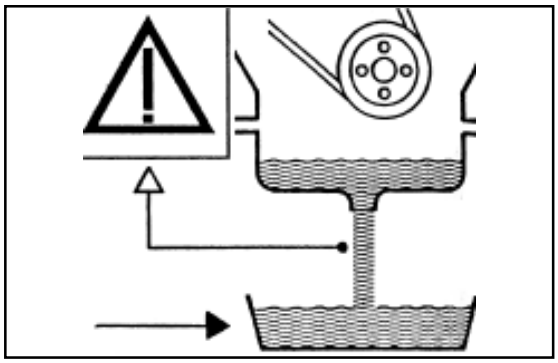

6.2.4 Replacement of oil filter cartridge

At the same times of oil exchanges, replace the oil filter cartridge.

Cartridge

- Drain engine oil by loosening the drain plug on the filter head.

Caution : *Don't forget tightening the drain plug after having drained engine oil.*

- Loosen the oil filter by turning it counterclockwise with a filter wrench.
- With a rag wipe clean the fitting face of the filter body and the oil filter body so that new oil filter cartridge can be seated properly.
- Lightly oil the O-ring and turn the oil filter until sealing face is fitted against the O-ring. Turn 1-1/4 turns further with the filter wrench.

Note : Use Kirloskar make genuine lube oil filter.

6.2.5 Centrifuge Lube oil filter

Instruction Manual

- **Introduction**

  The Centrifuge Cleaner cleans your engine oil continuously when your engine is running. It separates dirt above 1 micron approximately from engine oil thus lowers wear rate of engine components drastically. It avoids harmful oil degradation and arrests depletion of oil additives increasing the oil life. The Centrifuge Cleaner does not require any spare parts to be replaced and gives consistent performance throughout engine oil.

- **Cleaning frequency**

  For consistent performance, the centrifuge rotor needs to be cleaned periodically as mentioned in this manual. It is recommended that you service the centrifuge every 250 hours of working or at every oil change period.

  The volume of dirt collected depends upon engine application, loading and environment in which engine is working. Exact period of servicing the centrifuge can thus vary between 200 hours of working to your oil change period. Please follow the instructions given below for cleaning of centrifuge cleaner.

- **Identification and location**

  The centrifuge Cleaner is located on the same manifold on which full flow oil filter is mounted. The centrifuge can be easily identified with a dome shaped cover bearing instruction sticker. The exact location and internal components of the centrifuge are shown in Figure below.

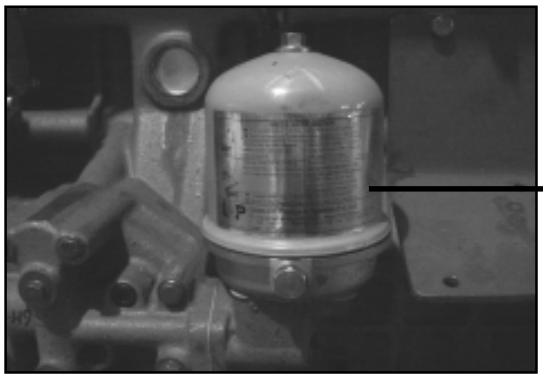

Centrifuge Lube oil filter

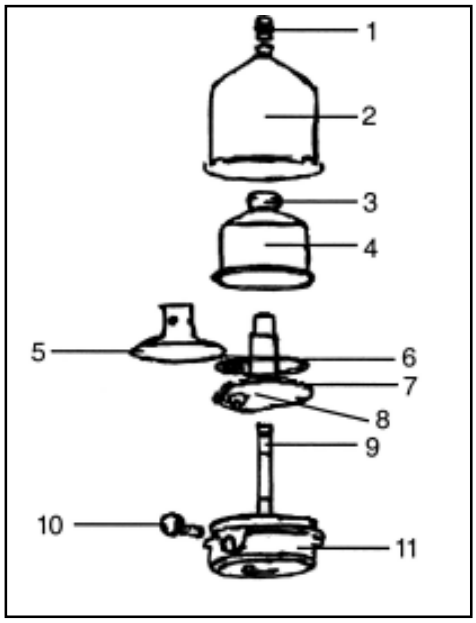

1 Cover nut (Top nut)
2 Centrifuge cover
3 Rotor nut
4 Rotor cover
5 Deflector
6 Rubber ‘O’ ring
7 Rotor body
8 Nozzle
9 Shaft
10 Valve assembly
11 Housing

- **Servicing Instructions**
  - o It is a precision assembly, handle with care.
  - o Carry out servicing preferably when the engine oil is still warm
  - o All threaded parts of the centrifuge require following gadgets : a 13 mm spanner, a blint knife, a small adjustable pliers and waste cotton for cleaning.

Servicing Procedure

Unscrew top nut with a 13 mm spanner and remove centrifuge cover. See Figure above. The centrifuge cover nut has a puller arrangement so that the cover will be lifted as you unscrew the top nut.

Hold the rotor in hand and lift rotor to remove it completely from central shaft. See Figure above.The rotor will contain about 200 ml of oil. Drain oil from the rotor. The rotor has two bushes at its ends. Take care while removing rotor from central shaft. The rotor should not fall; otherwise it will damage the bushes.

Unscrew rotor nut by holding rotor assembly in hand. The rotor nut can be opened by hand. If it is tight, unscrew it with light pliers. Never grip the rotor nut tightly in clamping device like a bench vice. It may damage the rotor body permanently. Remove rotor cover and deflector inside. For removing rotor cover, remove the rotor nut completely, hold the rotor cover in hand and give a light blow to the rotor body at the rotor nut end by hand. The rotor body and deflector will come out from the opposite end.

After you open the rotor, you will see cake formed sticky dirt mass all around the rotor cover from inside. Remove the dirt by a blunt knife as shown. Clean the rotor cover and all rotors thoroughly by compressed air. See Figure below. Clean the centrifuge central shaft also.

Assemble rotor in correct sequence of parts. Match arrow marks on rotor cover and rotor. Tighten rotor nut firmly by hand. Install rotor on shaft and assemble cleaner cover.

Now your centrifuge is ready to collect more dirt from oil.

Points to care about centrifuge cleaner

1. Replace rubber rings if deformation or cuts are observed. Using damaged rubber rings will result in oil leakage and improper functioning of centrifuge cleaner.

2. While assembling the rotor, ensure that the rubber ring has taken proper seat in its place. This is necessary for proper sealing of rotor assembly.

3. Take care with the centrifuge housing and rotor body. They are made of aluminium, hence are susceptible to damage due to accident.

4. Always ensure that the arrow marks on rotor cover and rotor are matched after assembling the rotor. See Figure above. The rotor body is dynamically balanced.

   Mismatch of arrow marks on rotor cover and rotor will result in excessive vibrations of the cleaner and part breakage.

5. The rubber ring is made of Viton rubber. Use genuine spare rubber ring only. Rubber ring of any other material will not give desired performance.

Don’ts about centrifuge cleaner

- Do not over tighten the top nut. Tighten just enough to prevent leakage of oil from centrifuge cover and housing. Over tightening top nut will damage the threading in centrifuge housing and damage the centrifuge permanently.

  Use 1.2 kg-m torque for tightening of centrifuge cover.

- Do not hold the rotor nut in clamping device like bench vice as shown. Extra clamping pressure on rotor nut may result in damaging the circularity of upper bush and will result in permanent damage to rotor assembly.

- Do not open or tamper with the valve assembly. The valve assembly is preset for opening oil pressure in engine’s oil gallery. If the setting is lost or the valve assembly is damaged, there is risk that your engine will not get enough oil or the centrifuge will not function properly.

Troubleshooting

Sr. No	Problem	Probable cause	Action
1.	Leakage through cleaner	Rectangular rubber ring damage	Change rubber ring.
2.	Rotor does not rotate	Nozzles blocked	Open rotor and clean nozzles Thoroughly. Re-assemble the cleaner.
3.	Rotor does not rotate even after cleaning nozzles	Entry valve blocked	Do not open entry valve assembly. It requires special tools Contact your Distributor.
4.	Rotor rotates but at low Speed	Leakage of oil through rotor assembly.	Open rotor and ensure that the rubber ring has taken proper seat on rotor body. Then re-assemble the rotor.
		Rotor filled with dirt completely	Time for cleaning the rotor
5.	Rotor speed very low or even rotor does not rotate	Bushes damaged permanently	Ensure that the rotor is free on Shaft. Else replace entire rotor Assembly.
6.	Abnormal vibrations of centrifuge cleaner	Mismatch between arrow marks on rotor cover and rotor	Open rotor and reassemble it properly.
7.	Cleaner does not collect any dirt	Rotor not rotating at desired speed	See point 2 & 3. **Consult your Distributor.**

Consult your Distributor in case of any doubt.

6.3 Cooling system

The coolant must be changed at intervals of 3000 hours operation or three years whichever comes first.

6.3.1 Coolant draining

Drain Valve

a) Remove the pressure cap.

b) Open the drain valve at the radiator lower part to drain the coolant as the right figure.

c) Loosen the coolant drain plug. Loosen the coolant drain plug of the cylinder block.

Caution : When removing the pressure filler cap while the engine is still hot, cover the cap with a rag, then turn it slowly to release the internal steam pressure This will prevent a person from scalding with hot steam spouted out from the filler port.

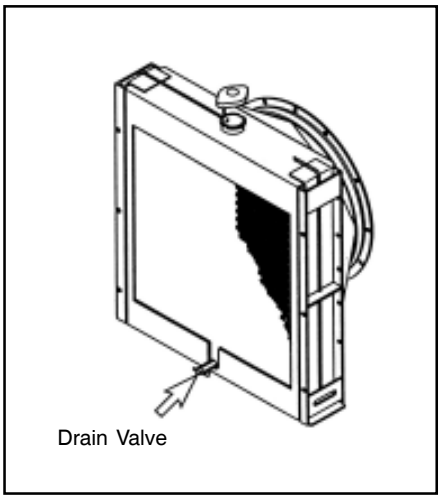

6.3.2 Cleaning of the cooling inside system circuit (by authorized specialist personnel)

When the cooling system circuit are fouled with water scales or sludge particles, the cooling efficiency will be lowered.

Investigations have shown that in many cases the poor condition of the coolant and /or the cooling system accounts for damage to the water pump mechanical seal, The poor condition of the cooling system is normally due to use of unsuitable or no anti-freezing agents and corrosion inhibitor or defect, not early enough replaced covers for filler neck and working valves.

If twice in a short time the water pump of an engine develops leases or the coolant is heavily contaminated (dull, brown, mechanically contaminated, grey or black sings of a leakage on the water pump casing) clean the cooling system prior to removing that water pump as follows.

a) Drain coolant.

b) Remove thermostats, so that the whole cooling system is immediately flown through when cleaned.

c) Fill the cooling system with a mixture of potable water and 1.5% by volume of cleaner.

d) Warm up engine under load. After a temperature of 60 C is reached, run engine for a further 15 minutes.

e) Drain cleaning fluid.

f) Repeat steps c) and d).

g) Flush cooling system.

h) Replace drain plug by drain plug with a bore of 8mm diameter.

i) Fill cooling system with hot water.

j) Run engine at idle for 30 minutes. At the same time continuously replenish the water leaking from the bore in drain plug by adding fresh water.

6.3.3 Intercooler / Charge Air Cooler

The intercooler is air to air type and has a large cooling fan capacity. The intercooler life and performance depends on the intake air condition greatly. Fouled air pollutes and clogs the air fins of intercoofer. As a result of this, the engine output is decreased and engine malfunction is occurred. So you always check whether the intake air systems like air filter element are worn or polluted.

- **Cleaning**

  In order to maintain the heat transfer efficiency of the intercooler, it is necessary to clean it at regular intervals.

  Cleaning of intercooler fins : Every 600 hours for normal site conditions.

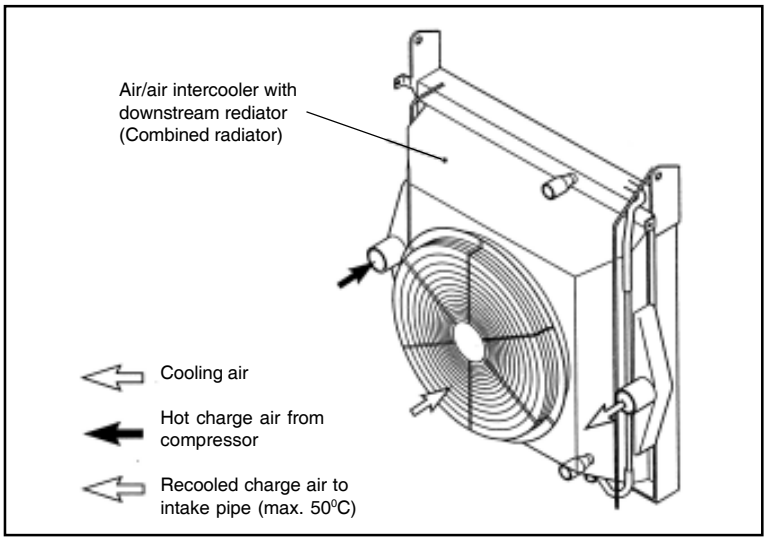

6.3.4 K COOL Super Plus

Pre-mixed 50/50 Extended Life Coolant. Specially developed for Kirloskar Oil Engines Ltd. For all water cooled engines.

How to use:

Arrest all leakage from the cooling system before cleaning

- Drain & Flush radiator & cooling system thoroughly with fresh water to remove loose materials.
- Refill with water and add 375 ml of K CLEAN for systems of less than 16 liters capacity. For larger systems add 1 liter of K CLEAN per 40 liter of system capacity.
- Run the engine at normal operating temperature for 30-40 minutes.
- Rinse with fresh water, and drain the water completely.
- Add K COOL Super Plus directly in your cooling system to fill the entire volume of the Radiator.

Caution:

- Do not add any water since KCOOL Super Plus is already a pre-mix formulation.
- For top up, add K COOL Super Plus as and when required.
- Drain KCOOL Super Plus from the system after 5000 running hours, or three year whichever is earlier.

Advantage of K COOL Super Plus against the conventional coolant

- Provides excellent protection for all cooling system metals including aluminum.
- Maintains water pump seal life.
- Eliminate gel formation.
- Contains organic acid inhibitors and does require use of salts of phosphate, borate, silicate etc.
- Compatible with rubber hoses & other –non- metallic parts of the cooling water.
- Eliminates formation of hard water scale.
- Anti boil properties reduce drainage from steam in cooling system.
- Ingredients have antifreeze properties.

Warning:

Product Contains Ethanediol (Ethylene glycol), harmful or fatal if swallowed.
Avoid eye & skin contact. Keep out of reach children.

First aid:

If swallowed take large quantities of water.
DO NOT induce vomiting .Get medical attention immediately. If eye contact occurs, flush eyes with water for at least 15 minutes.

- Protect the environment
- Dispose of the drum after triple rinse.
- Dispose of engine coolant should not be done into drains, soil, sewer system or open water.

Old System should be cleaned with K CLEAN prior to use of K COOL Super Plus:

- After cleaning Fill up the system completely with K COOL Super Plus
- Do not add any water. Use K KOOL Super Plus only for top up.

K COOL Super Plus available only at authorized Kirloskar service dealer outlets.

6.4 Air intake system

1. Pre - Cleaner
2. Air Cleaner
3. Dust Vaccuator Valve
4. Connection Port

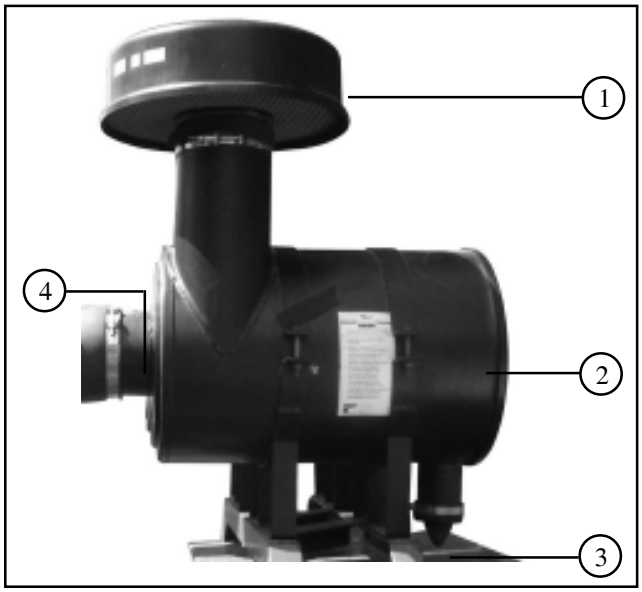

Maintenance of air cleaner

- The pre-cleaner (if provided) should be cleaned to remove the accumulated dust, after each day's work, when the engine is stopped.
- The restriction indicator, mounted on air cleaner near the hose, indicates the condition of the air cleaner element, when the air element is in good condition, a red signal will be seen through the transparent window on the indicator when the engine is running and will disappear when engine is stopped. However, if the element is choked, then the red signal will remain 'ON' even after engine is stopped. This is an indication that the main filter element must be removed & cleaned or replaced.

NOTES: -

1. If engine performance is poor, but restriction is still within limits, do not change the element. The air cleaner is probably not at fault.
2. To get those extra service hours out of air cleaner element, make sure the air inlet is away from any heavy dust clouds caused by operation. Also, make sure that exhaust carbon cannot enter the air cleaner.
3. Discharge the dust vaccuator valve by pressing apart the lips of the ejection slot.

- Clean the vacuation slot time to time.
- Remove any cakes of dust by pressing together the upper part of the valve.
- Make sure that vacuator valve is not damaged, if required change it

Cleaning of Filter Element

Cleaning of filter element is to be done only when a restriction indicator shows a red signal even after the engine is stopped. For cleaning proceed as follows -

1) Remove the wing nut of the air cleaner and then remove the cover.

2) Remove the wing nut of main element & remove the element

3) Use a damp cloth to wipe out all dust in the air cleaner.

4) Thorough cleaning of the fitter element with compressed air is recommended.

5) Clean the element from inside to outside using the pressurised air pipe.

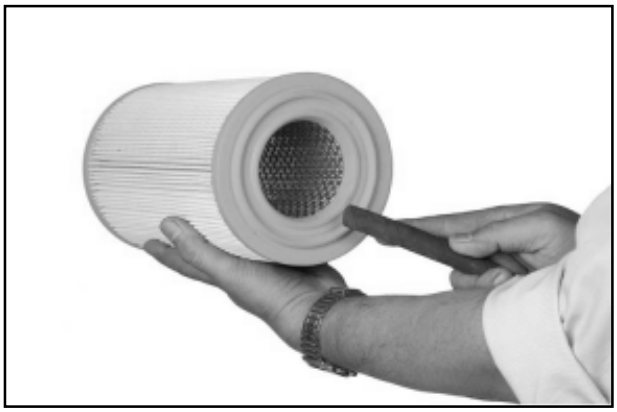

IMPORTANT - Too much air pressure can break the filter paper and destroy the element. (Max. Air Pressure 3.0 kg/cm2)

6) Replace the main element after two cleaning intervals.

7) Rapping, Tapping or Pounding dust out of them is dangerous. Severe damage to the filter will result!

8) Carefully check new or properly cleaned element for damage before installing. Conduct a light test by passing the light through element as shown in Figure. If there is any crack in the element, the light will pass through it. In that case replace the element.

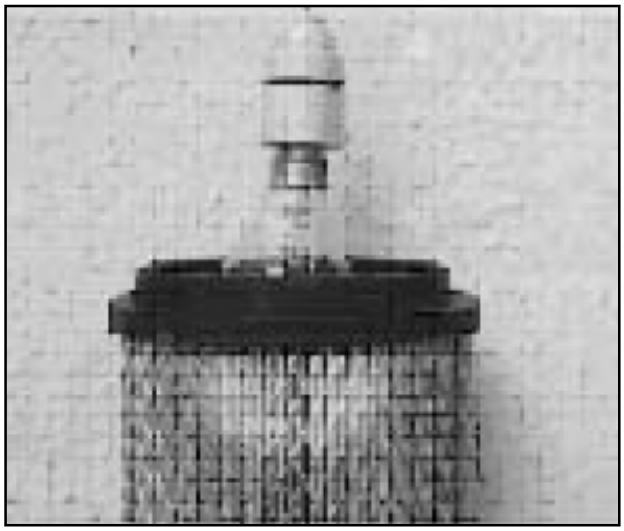

9) The inner element (Safety element) is not to be removed, when the main element is removed for cleaning/ replacement. It should be replaced by a new safety element after every three changes of the main element.

10) Replace the cleaned or new element in the air cleaner body and reinstall the end cover, making sure it seals 360° around the air cleaner body. Reset the restriction indicator by pressing the button at the top.

6.5 Fuel system checks

Fill the tank with the recommended fuel. Keeping tanks full reduces water condensation and helps keep fuel cool, which is important to engine performance. Make sure fuel supply valves (if used) are open.

To insure prompt starting and even running, the fuel system must be primed with the fuel feed pump manually before starting the engine the first time, or after a fuel filter change. Refill at the end of each days operation to prevent condensation from contaminating the fuel. Condensation formed in a partially filled tank promotes the growth of microbial organisms that can clog fuel filters and restrict fuel flow.

If the engine is equipped with a fuel water separator, drain off any water that has accumulated. Water in fuel can seriously affect engine performance and may cause engine damage. KOEL recommends installation of a fuel water separator on generator units.

6.5.1 Fuel Contamination and water trap

In the generator environment, the most likely fuel contaminants are water and microbial growth (black slime). Generally, this type of contamination is the result of poor fuel handling practices.

Black slime requires water in the fuel to form and grow, so the best prevention is to keep water content to a minimum in storage tanks.

If diesel fuel which contains moisture is used the injection system and the cylinder liners / pistons will be damaged. This can be prevented to same extent by filling the tank as soon as the engine is switched off while the fuel tank is still warm (formation of condensation is prevented). Drain moisture from storage tanks regularly. Drain the water from water seperator by loosing plug after every 50 Hoursof the fuel filter is also advisable.

Notice : A galvanized steel tank should never be used for fuel storage, because the fuel oil reacts chemically with the zinc coating to form powdery flakes which can quickly clog the fuel filters and damage the fuel pump and injection nozzles.

6.5.2 Priming pump strainer cleaning

Clean the priming pump strainer every 250 operation hours.

The strainer is incorporated in the priming pump inlet side joint bolt.

Clean the strainer with the compressed air and rinse it in the fuel oil.

6.5.3 Bleeding the fuel system

After the cleaning of the fuel filter or after the engine stop by the lack of fuel, the bleeding of the fuel system must be executed by all means. Bleed the system by manually operating the priming pump with fuel filter outlet joint bolt and injection pump bleeder screw loosened.

- Press the feed pump cap repetitively until the fuel without bubbles comes out from the bleeding valves.
- After the whole air is pulled out, close the valve of the filter.
- Confirm the resistance of fuel delivery by the repetition pressing of the feed pump cap, Pressure and turn the feed pump cap simultaneously to close it.
- A separate bleed screw has been provided for bleeding of air.

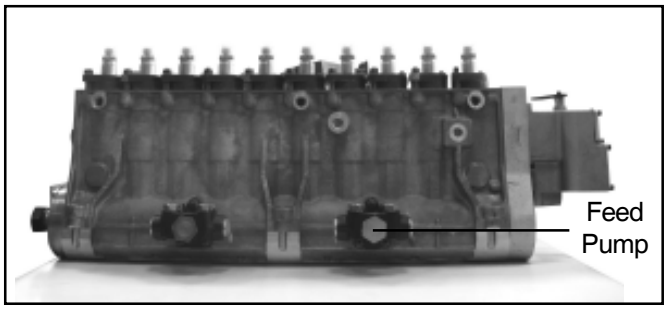

6.5.4 Injection pump

- Check the fuel injection pump housing for cracks or breaks, and replace if damaged.
- Check and see if the lead seal for idling control and speed control levers have not been removed.
- No alterations must be made to the injection pump. If the lead seal is damaged the warranty on the engine will become null and void.
- We strongly recommended that any faults developing in the injection pump should be taken care of by authorized specialist personnel.

6.5.5 Injection Nozzle Maintenance (by authorized specialist personnel)

The injectors are designed to spray the fuel delivered by the injection pump directly into the spherical combustion chamber in the piston crown.

The injector consists of the nozzle and the nozzle holder.

A copper seal fitted to the injector ensures gas-tight seating and good heat dissipation.

The opening pressure of the nozzle is adjusted by means of shims at the compression spring.

- Install a nozzle to a nozzle tester.
- Check injection pressure, and adjust the nozzle using the adjusting shim if the pressure does not meet the specified limit.
- Check nozzle spray patterns and replace if damaged.

	NEW	USED
Injection Nozzle pressure	250kg/cm^2	220kg/cm^2

Caution : The injection lines are designed for high operating pressures and should thus be handled with particular care.

- When mounting the pipes to the engine take care of good fitness.
- Do not bend pipes to permanent deformation (not for replacing the nozzles either).
- Do not mount any heavily bent pipes.
- Avoid bending the pipes at the ends by more than 2 to 3 degrees.

In case of faults in the injection system which might have resulted in excessive operating pressures, not only the failed part but also the injection line has to be replaced.

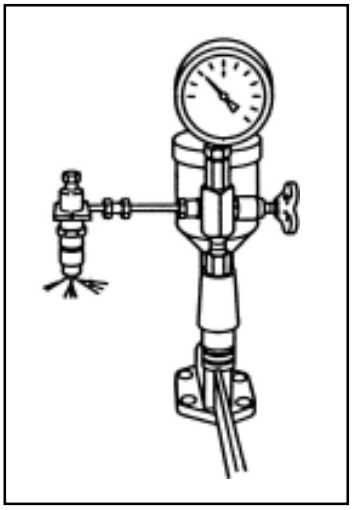

6.5.7 KOEL Recommends use of K Add (D) for diesel.

- This hepls in easier starting.
- Improves fuel economy & power.
- Enhances fuel stability.
- Reduces exhaust emissions.
- Provides detergency action to keep nozels / injectors cleane.
- Reduces corrosion.
- Reduces engine maintenance cost.

6.6 Turbocharger Maintenance

IMPORTANT: Disassembly nullifies Schwitzer warranty responsibility so it is important to check that the turbocharger is no longer under warranty before dismantling.

l. Mark the relative positions of the turbine housing and compressor cover to the bearing housing.

2. Check the motion of the shaft for excessive radial or axial play. Refer to the 'Service Limits and Torque Values' Data Sheet.

3. Rest the turbocharger on the bench and unfasten the turbine housing clamp plates.

4. Lift off the turbine housing.

5. Repeat 3 for the compressor cover and carefully lift the cartridge assembly from the compressor cover.

6. Clamp the 12 point socket wrench in the vice and place the hub of the turbine wheel into the socket so that the shaft is in a vertical position.

7. Holding the cartridge in one hand release the compressor locknut.

NOTE : Left hand thread. Over tightening the nut may cause yield in the shaft.

8. Remove the nut and slide off the compressor wheel.

9. Carefully remove the shaft from the bearing housing assembly by gently tapping the shaft with a small soft faced hammer.

TAKE CARE NOT TO BEND OR DAMAGE THE SHAFT.

10. Remove the turbine backplate and sit the bearing housing on the turbine backplate.

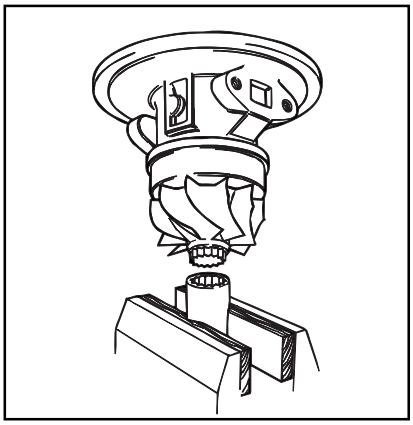

11. Remove the insert circlip using the circlip pliers. Remove the insert assembly using two levers and remove the flinger sleeve from the insert.

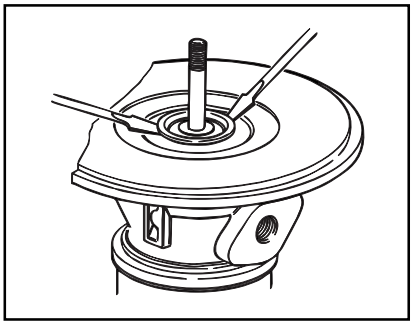

12. Remove the oil deflector, thrust bearing and thrust sleeve from the bearing housing.

13. Using circlip pliers, remove the outer circlip from both ends of the bearing housing.

14. Remove the journal bearings.

NOTE : New bearings should be fitted on reassembly.

15. Remove inner circlips.

Cleaning is generally done by soaking the components in commercially available non-caustic solvent, wiping, brushing or scraping any residue off and then blow drying with clean compressed air. However, vapour blasting is a good alternative if available, providing the vapour blasting equipment manufacturers instructions are carefully followed and critical surfaces are appropriately protected (see details below).

If parts are to be stored for any length of time after cleaning then they should be stored in clean, dry plastic bags and the surfaces of all potentially rusting parts should be oiled prior to storage.

1. Bearing Housing
   a. Scrape, brush or wipe as appropriate, to remove accumulations of residue from the exterior surfaces.
   b. Immerse briefly in safety solvent to remove any oily residue.
   c. Blow dry with compressed air. N.B. If vapour blasting is used mask the bore with corks or rubber stoppers.
2. Compressor Wheel
   a. Immerse briefly in safety solvent to remove any traces of oily residue.
   b. Blow dry with compressed air. N.B. If vapour blasting then take care to mask the bore with corks or rubber stoppers.
3. Shaft and Wheel
   a. Immerse briefly in safety solvent to remove any traces of oily residue.
   b. Blow dry with compressed air. N.B. If vapour blasting then take care to mask the entire shaft section with either appropriately sized rubber hose or adhesive backed cloth tape.
   c. After cleaning mount the shaft and wheel between centres in a lathe and lightly polish the journal section of the shaft at 300 to 600 rpm with 400 grit abrasive paper and clean oil. NOTE: If the shaft and wheel shows any evidence of imbalance (bearing material smeared on only one side of the shaft) - do not attempt to reuse.
   d. After polishing re-immerse briefly in safety solvent and blow dry with compressed air.
4. Compressor cover
   a. Scrape, brush or wipe, as appropriate, to remove accumulations of residue from the exterior surfaces.
   b. Immerse briefly in safety solvent to remove any oily residue.
   c. Blow dry with compressed air. N.B.No masking necessary if vapour blasting.
5. Turbine Housing and Backplate
   a. Blast with coarse sand or steel grit to obtain total interior and exterior cleanliness.
   b. Immerse briefly in safety solvent to remove residues.
   c. Blow dry with compressed air.
6. V Clamps
   a. Immerse in safety solvent agitating moderately until foreign material deposits have been softened or dissolved.
   b. Blow dry with compressed air.
7. Small Internal Parts
   a. Immerse briefly in clean safety solvent to remove oily residues.
   b. Wipe dry with a clean cloth.

INSPECTION OF PARTS FOR RE-USE

It is recommended that all visual and dimensional checking of parts for re-use be done after parts have been cleaned as described above. Critical dimensions mentioned below are given in the latest issue of the 'Hundred Series Service Limits and Torque Values' Data Sheet.

1. Bearing Housing

   a. Inspect visually for evidence of cracks and fractures, pitting of gasket and other machined surfaces, or distortion of the turbine end flange. Reject and replace if any of the above conditions are severe.

   b. Closely inspect the bearing bore visually for signs of damage or wear. The condition of the removed bearings will be a good indicator of the bore condition. Refer to 'Service Limits Tables' for maximum bore diameters. Reject and replace if bore condition is substandard.

   c. Examine the turbine end seal bore for damage and replace bearing housing if wear is excessive.

N.B. Do not mistake the machined step and relief groove for a wear ridge.

2. Compressor Wheel

   Inspect visually for evidence of bent, burred, nicked or eroded blades and for evidence of scuffing on the back face. Dynamically balance the Compressor wheel and reject and replace if any damage has affected wheel balance. Do not attempt to straighten bent blades.

3. Shaft and Wheel

   a. Inspect visually for evidence of bent, burred, nicked or eroded blades and for evidence of scuffing on the back face. Very minor damage is acceptable but reject and replace if the damage appears sufficient to affect wheel balance. Do not attempt to straighten bent blades.

   b. Inspect hub visually for evidence of smearing (as with high speed contact with the bearing house bore) and for deterioration of the original rectangular configuration of the piston ring groove. Reject and replace if the damage or wear is excessive.

   c. Inspect journal diameter for wear. If this appears reusable the diameter should be checked with a micrometer referring to the 'Service Limits Tables'.

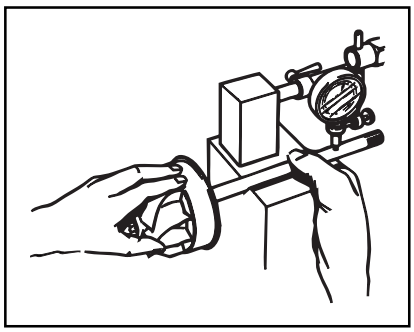

   d. Measure eccentricity between the large and small shaft diameters with a test dial indicator and vee-block, referring to 'Service Limits Tables'.

   e. Dynamically balance the shaft and wheel assembly, referring to the 'Service Limits Tables'. Do not attempt to straighten a bent shaft.

4. Compressor Cover

   Inspect visually for evidence of contour damage (as from high speed wheel contact). Reject and replace if damage is excessive. It is permissible to polish out minor surface damage in the contour.

5. Turbine Housing and Backplate

   Inspect visually for evidence of contour damage (as from high speed wheel contact) and for evidence of overtemperature damage such as cracking, pitting, distortion or erosion. Reject and replace if damage is excessive.

6. Insert

   Inspect the insert bore for evidence of surface damage. If there is evidence of contact with rotating components or if the piston ring wear has created a ridge the insert should be rejected and replaced.

7. Flinger Sleeve

   Inspect visually for evidence of surface damage from contact with stationary parts. If piston ring wear has caused the ring groove to deteriorate from its original rectangular configuration reject and replace the flinger sleeve.

8. V Clamps

   Inspect visually for evidence of cracks or distortion of the clamp and T-bolt threads. Reject and replace if damage is excessive.

When reassembling the turbocharger a Schwitzer Overhaul Kit should always be used (see Parts List on the S300 Exploded View).

1. Re-use only parts complying with the “Inspection of Parts for re-use” guidelines.
2. Ensure all parts to be re-used have been thoroughly cleaned as described in the “Parts Clean-Up Procedure”.
3. Fit inner circlips to the bearing housing with the chamfered edge towards the bearing.
4. Lubricate the new journal bearings with clean oil and fit into the bearing housing, using the outer circlips with the chamfered edge towards the bearing.

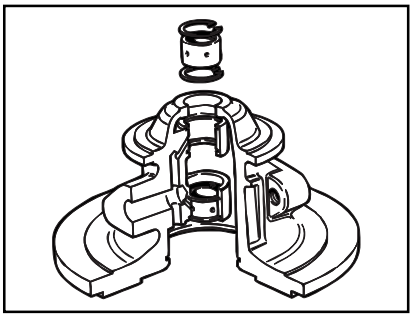

5. Fit the new piston ring into the second groove in the hub of the shaft.
6. Place the bearing housing on the bench turbine end uppermost and fit the backplate.
7. Lubricate both shaft and piston ring with clean oil and fit the shaft and wheel assembly into bearing housing. TAKE CARE NOT TO DAMAGE THE PISTON RING.

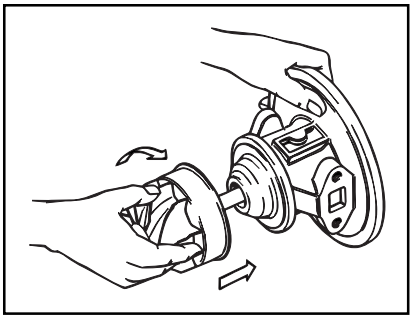

8. Place the assembly into the turbine housing with the shaft vertically up.
9. Lubricate the new thrust bearing surfaces and fit the new thrust sleeve.
10. Fit the thrust bearing assembly into the bearing housing engaging on the locating pin, then fit the oil deflector with the oil deflector tongue fitting into the cutaway section of the thrust bearing.

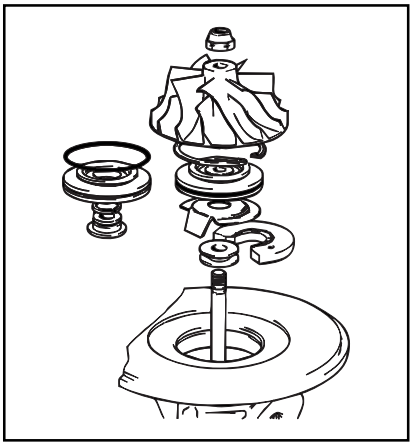

11. Fit the new 'O' ring onto the insert and a new piston ring into the flinger sleeve.
12. Fit the flinger sleeve assembly into the insert. TAKE CARE NOT TO DAMAGE. THE PISTON RING.
13. Lubricate the insert 'O' ring and press the insert into the bearing housing. Fit the circlip with the gap at 90 degrees to the cutaway section in the thrust bearing.

    ENSURE THE BEVELLED EDGE IS UPPERMOST AND THE INSERT IS PRESSED HOME FLAT.

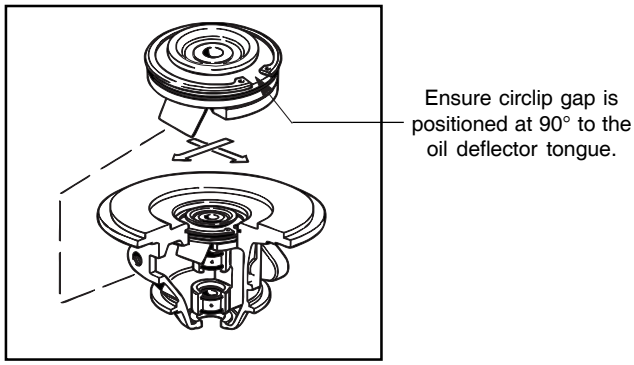

14. Fit the compressor wheel and new locknut.
15. Using the appropriate equipment tighten the locknut in accordance with the Fastener 'Torque Values' Table.
16. For turbochargers which have a compressor end 'O[1] ring, (see turbocharger Parts List to check), fit this to the compressor end of the bearing housing and lubricate with clean engine oil.
17. Place the bearing housing into the compressor cover and fix the clamp plates, using the set screw and washer assemblies.

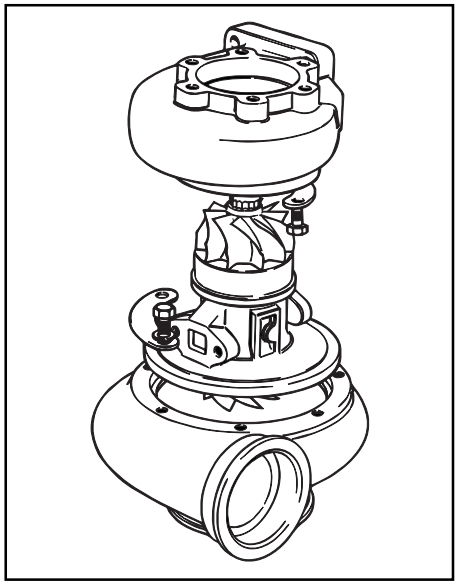

18. Orientate the turbine housing and compressor cover to the desired position and fit the clamp plates. Fasten in accordance with the values given in the 'Fastener Torque' table.

    Whilst every care has been taken to provide accurate information in this Data Sheet Schwitzer cannot accept any liability for any inaccuracies. All rights reserved.

    If you have any questions regarding service of Schwitzer turbochargers please contact your nearest Schwitzer location.

7 Checking and setting

7.1 Adjustment of valve clearance

7.1.1 General information

The valve clearances are to be adjusted at the times of the following situations.

- After initial 50 hour's operation.
- When the engine is overhauled and the cylinder heads are disassembled.
- When abnormal noise comes from valve train.
- When the engine is not normally operated, even though there is no trouble in the fuel system. The valve clearance of the cold engine are as follows.

  - Intake valves : 0.35mm

  - Exhaust valves : 0.35mm

7.1.2 Adjusting order of the valve clearance

1) Turn the flywheel so that Cyl.No.1 is at TDC, ensure that it is compression TDC, adjust the valve clearances. Adjust valve clearances when engine is cold.

2) Loosen the lock nuts of rocker arm adjusting screws and push the feeler gauge of specified value between a rocker arm and a valve bridge and adjust the clearance with adjusting screw respectively and then tighten with the lock nut.

Model	Intake Valve	Exhaust Valve
DV8/DV10/DV12	0.35 mm	0.35 mm

Then turn the cranshaft as follows for adjusting valve clearances of other cylinders (Follow firing order) :

- DV8 Engine - Rotate by 90^0 each time to adjust valve clearance of successive cylinder.
- DV10 Engine - Rotate by 54^0 for & 90^0 alternatively
- DV12 Engine - Rotate by 60^0 each time to adjust valve clearance of successive cylinder.

3) No. 1 Cylinder is located at the side where flywheel was installed.

7.1.3 Method of adjusting the valve clearance

1) Loosen the lock-nuts using a ring spanner.

2) Insert a thickness gauge of 0.35 mm between valve bridge and rocker arm.

3) Turn the adjusting screw using a screw driver until the gauge can be pulled out with some restriction.

4) After the adjustment fix the adjusting screw not to rotate and tighten the lock-nut at the same time.

5) Measure the clearance one more time and if necessary adjust again.

7 Checking and setting

7.1 Adjustment of valve clearance

7.1.1 General information

The valve clearances are to be adjusted at the times of the following situations.

- After initial 50 hour's operation.
- When the engine is overhauled and the cylinder heads are disassembled.
- When abnormal noise comes from valve train.
- When the engine is not normally operated, even though there is no trouble in the fuel system. The valve clearance of the cold engine are as follows.

  - Intake valves : 0.35mm

  - Exhaust valves : 0.35mm

7.1.2 Adjusting order of the valve clearance

1) Turn the flywheel so that Cyl.No.1 is at TDC, ensure that it is compression TDC, adjust the valve clearances. Adjust valve clearances when engine is cold.

2) Loosen the lock nuts of rocker arm adjusting screws and push the feeler gauge of specified value between a rocker arm and a valve bridge and adjust the clearance with adjusting screw respectively and then tighten with the lock nut.

Model	Intake Valve	Exhaust Valve
DV8/DV10/DV12	0.35 mm	0.35 mm

Then turn the cranshaft as follows for adjusting valve clearances of other cylinders (Follow firing order) :

- DV8 Engine - Rotate by 90^0 each time to adjust valve clearance of successive cylinder.
- DV10 Engine - Rotate by 54^0 for & 90^0 alternatively
- DV12 Engine - Rotate by 60^0 each time to adjust valve clearance of successive cylinder.

3) No. 1 Cylinder is located at the side where flywheel was installed.

7.1.3 Method of adjusting the valve clearance

1) Loosen the lock-nuts using a ring spanner.

2) Insert a thickness gauge of 0.35 mm between valve bridge and rocker arm.

3) Turn the adjusting screw using a screw driver until the gauge can be pulled out with some restriction.

4) After the adjustment fix the adjusting screw not to rotate and tighten the lock-nut at the same time.

5) Measure the clearance one more time and if necessary adjust again.

7.2 Adjustment of Injection Timing

Injection timing is required to be adjusted when fuel pump has been removed from the engine during major overhaul or fuel pump calibration.

7.2.1 Method of Adjusting Injection Timing

- Turn the flywheel until TDC mark on flywheel (Cylinder No.1) matches with the mark on flywheel housing (Ensure that it is compression TDC). Then rotate the engine anti-clockwise so as to match fuel timing mark on flywheel with mark on flywheel housing.
- Connect external diesel pump trolley to fuel pump.
- Start the pump and adjust delivery pressure to 15 bar.
- Rotate fuel pump shaft until fuel spill is cut-off for Cyl.No.1.
- Assemble fuel pump gear & tighten the bolts.
- Disconnect external diesel pump trolley.
- Assemble H.P. Pipes & Overflow Pipe.

	DV8	DV10	DV12
Fuel injection timing (B.T.D.C static)	16°	16°	16°

7.3 Tightening the cylinder head bolts

- The cylinder head bolts are to be tightened in steps as mentioned in table. Bolts are to be tightened in diagonally opposite sequence.

  The tightening by excessive torque may cause the damages of the cylinder head gaskets, the flanges of cylinder liners and the cylinder head bolts, therefore obey the regular torque.

Tightening Toruqes

Sr. No.	Parameter	Initial torque Kgm	Tightening Method Kgm			Total torque torque (Kgm)
			Stage 1	Stage 2	Stage3	
1.1	Bolt for balance weight	5	15	30	35	35
1.2	Bolt for main bearing cap	5	15	26	–	26
1.3	Bolt for connecting rod (Ml 2 X 1.5)	5	15	26	–	26
1.4	Bolt for crank pulley	5	10	20	–	20
1.5	Bolt for flywheel	10	25	49	–	49
1.6	Bolt for bell housing					
1.7	Nut for injector stud	–	–	–	–	3.5
1.8	Nut for fuel pump hub	–	–	–	–	20
1.9	Bolt for cylinder head	5	15	26	–	26
1.10	All M8x 1.25 screws/ bolts	–	–	–	–	2.5
1.11	All Ml Ox 1.5 screws/bolts	–	–	–	–	3.5

Note: Threads and seating faces of fasteners to be cleaned and wetted with engine oil, before assembly.

7.4 Cylinder compression pressure

1) Stop the engine after warming it up, then remove the nozzle assemblies.
2) Install a special tool (gauge adapter) in nozzle holder hole and connect the compression pressure gauge to the adapter.
3) Cut off fuel circulation, rotate the starter, then measure compression pressure of each cylinder.

Standard	24-28 kg/cm^2
Limit	24 kg/cm^2 or less
Allowance among cylinders	L 10% or less

- Testing conditions : at water temperature of 20 °C and speed of 200 rpm (10 turns)

8 ROUNTINE MAINTENANCE CHART

Inspection		Daily	First 50 hrs	Every 250 hrs	Every 500 hrs	Every 750 hrs	Every 1000 hrs	Remarks
Cooling system	Check for leakage (hoses, clamp)	O						
	Check the coolant level	O						
	Change the coolant							Every 5000 hrs
	Check & Adjust the V-belt tension						O	
	Replace V-Belts							3000 Hours
	Check Radiator Cooling fins			O				
	Check the radiator hoses						O	
Lubrication system	Check for leakage	O						
	Check the oil level	O						
	Change the lubricating oil		●		●			
	Replace the oil filter cartridge		●		●			
Intake & Exhaust System	Check the leakage for intercooler	O						(hoses, clamp)
	Replace the air cleaner Inner element						●	
	Replace the air cleaner Outer element				●			
	Check air cleaner choke indicator	O						
	Clean the inter-cooler air fins			O				
	Replace the air inlet hoses							5000 Hours
Fuel system	Check the leakage in fuel lines	O						
	Clean the fuel strainer of fuel feed pump			O				
	Remove sediment from fuel lank						O	When necessary
	Drain the water in separator			O				
	Replace the fuel filter Cartridge		●	●				
	Replace coarse fuel filter			●				
	Check the injection nozzles							3000 Hours
Engine opration	Check the state of exhaust gas	O						
	Check the battery charging	O						
	Check the compression pressure						O	5000 Hours
	Adjust Intake / Exhaust valve clearance		O				O	When necessary
Coolant	PH and Nitrite Content of coolant			O				
Electrical Systems	Check Sp. Gr. & electrolyte level in batteries			O				
	Check battery terminals			O				
	All electrical connections						O	
Other	All external fasteners			O				
	Radial & axial clearances of turbocharger							3000 hours

O : Check & Adjust **● : Replace**

ALWAYS COMPLY WITH SAFETY REGUKATION

*** SPECIFICATIONS ARE SUBJECT TO CHANGE, ALWAYS REFER LATEST SPECIFICATIONS.**

9 Engine preservation

Preservatives and Preservation procedure is recommended for engine when it is to be kept idle (out of use) for prolonged period (more than 12 months).

9.1 Recommended Preservatives

MANUFACTURER	Engine Lube oil and Fuel system	Engine Cooling System	Unpainted Ferrous metal Parts
Bharat Petroleum	Bharat Preserve Oil 30	Bharat Sherol B Emulsion with water in ratio 1:20	Bharat Rustrol 152
Indian Oil	Servo Preserve 30	Servo Cut S 20% Emulsion with water	Servo RP 125
Hindustan Petroleum	Autoprun T 120	Koolkit 40 5% Emulsion with water	Rustop 274
Castrol India	-	-	Rustilo DW 904 or DW 901
Tide Water Oil Co.	Veedol 30/40	Veedol Amulkut 4 Emulsion with water in Ratio 1:15	Veedol Ruspro IT

9.2 Preservation Procedure

a) Using H.S.D. fuel, run the engine at approximately 70% of maximum rated speed with 'No' load for 5 minutes to warm up the engine (in case of fixed speed engines like engine for Genset, it can be run at rated speed).

b) After stopping the engine, drain lube oil from sump and refill with suitable preservative oil as mentioned above.

c) Run the engine on 'No' load for 3 minutes. During this time the preservative will be circulated throughout the lube oil system of engine. Stop the engine and disconnect diesel fuel supply to fuel pump inlet. For engine speed refer point 8.2 (a).

d) Prepare a solution Diesel + Preservative Oil (5:1 ratio) in a separate tank and connect fuel line from this tank, directly to fuel pump inlet ensuring gravity feed (by-pass fuel filter).

e) Drain coolant from cooling system and thoroughly flush with clean water. The system then should be filled with mixture of water and any of the cooling system preservatives mentioned in Annexure-1.

f) Electrically crank the engine tilt it fires (in case of purely hand start engine, hand - crank the engine using decompressor lever, till it fires) and let it run for 30 seconds. During this time the diesel in fuel pump gallery and high pressure pipes will be displaced by Diesel + Preservative Oil mixture. Stop the engine.

   Engine speed during above running -

   - In case of variable speed engine - 800 to 1000 rpm
   - In case of fixed speed engine - Rated speed at 'No' load. (Genset, Pumpset etc.)

g) Close the air inlet manifold (for the air cleaner inlet) and crank the engine by starter for 5 to 10 seconds. (In case of purely hand start engine, it should be hand cranked using the de-compressor lever). This will ensure coating of Diesel + Preservative oil on the combustion chamber surfaces.

h) Drain preservative oil from oil sump, reinstall drain plugs and reconnect fuel filter into the fuel pipe line.

i) Treat all unpainted external ferrous metal parts with two coats of suitable rust preventer as recommended in 8.1, allowing sufficient time for the first coat to thoroughly dry before applying second coat.

j) All vents i.e. engine inlet pipe, exhaust pipe, air cleaner inlet, crankcase breather etc. to be carefully sealed with water proof paper and water proof adhesive tape.

k) Dipstick on engine to be sealed in place, with water proof adhesive tape.

NOTE: - DO NOT ROTATE CRANKSHAFT AFTER ABOVE MENTIONED OPERATIONS.

l) Loosen 'V belts tension.

m) Battery for engine starting, if provided, should be disconnected and stored in a cool, dry place after ensuring the electrolyte level, refill with distilled water, if necessary.

It is recommended to recharge the battery every 30 days.

n) Tag engine to indicate that it has been treated with preservatives, and should not be turned over until ready to run, due to possible reduction of protective film. The tag should show the date of treatment and validity date.

o) It is preferable to warp the engine in polyethylene bag and store in dry shade. Periodically inspect the engine for rust or corrosion and take corrective action if any.

p) If the engine is to be stored unused for more than 12 months, repeat the above procedure completely, after every 12 months.

9.3 Commissioning of Preserved Engine

a) Remove all the sealing tapes / papers from various openings.

b) Remove the Rust Preventive coating from those unpainted machined surfaces, which are interfacing surfaces for the driven equipment. This can be done using NC Thinner.

c) Fill recommended grade of lube oil in the oil sump upto the 'Top' mark of the dipstick. For oil filling quantity see 2.5.5.

d) Fill cooling system with K-Cool Super Plus Coolant.

e) Readjust the V-belt tension after checking the condition of V-belt (s), replace, if necessary (see 5.5).

f) Reconnect a fully charged battery to recommended voltage and Amp-hr capacity ensuring correct polarity connection (where applicable).

The engine is now ready for reuse. Follow the instructions given in section 3 before starting the engine.

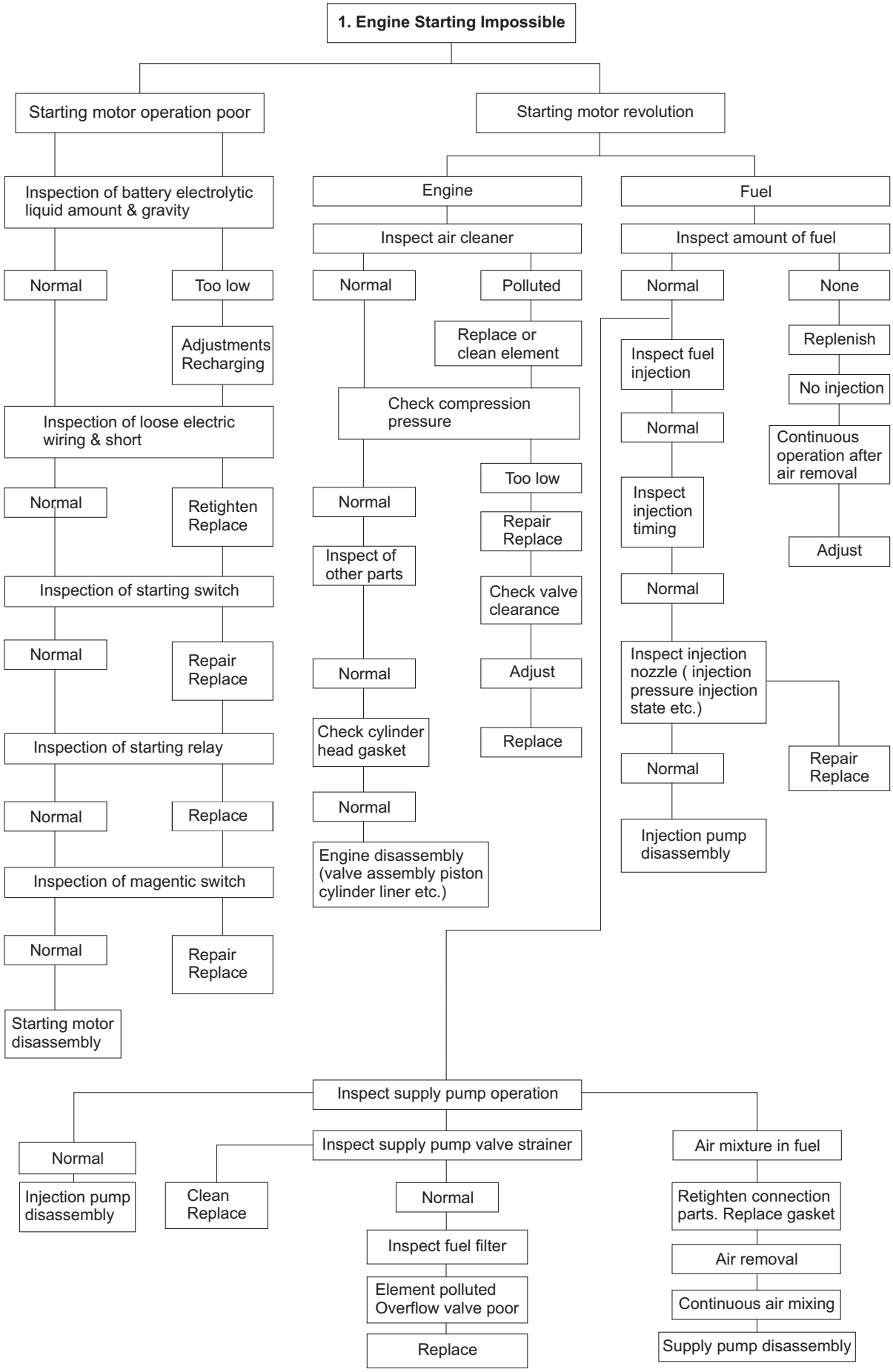
1. Engine Starting Impossible
Starting motor operation poor
Starting motor revolution
Inspection of battery electrolytic liquid amount & gravity
Normal
Too low
Adjustments Recharging
Inspection of loose electric wiring & short
Normal
Retighten Replace
Inspection of starting switch
Normal
Repair Replace
Inspection of starting relay
Normal
Replace
Inspection of magentic switch
Normal
Repair Replace
Starting motor disassembly
Engine
Inspect air cleaner
Normal
Polluted
Replace or clean element
Check compression pressure
Normal
Too low
Repair Replace
Inspect of other parts
Check valve clearance
Normal
Adjust
Check cylinder head gasket
Replace
Normal
Engine disassembly (valve assembly piston cylinder liner etc.)
Fuel
Inspect amount of fuel
Normal
None
Replenish
No injection
Continuous operation after air removal
Adjust
Inspect fuel injection
Normal
Inspect injection timing
Normal
Inspect injection nozzle (injection pressure injection state etc.)
Normal
Repair Replace
Injection pump disassembly
Inspect supply pump operation
Normal
Injection pump disassembly
Inspect supply pump valve strainer
Clean Replace
Normal
Inspect fuel filter
Element polluted Overflow valve poor
Replace
Air mixture in fuel
Retighten connection parts. Replace gasket
Air removal
Continuous air mixing
Supply pump disassembly

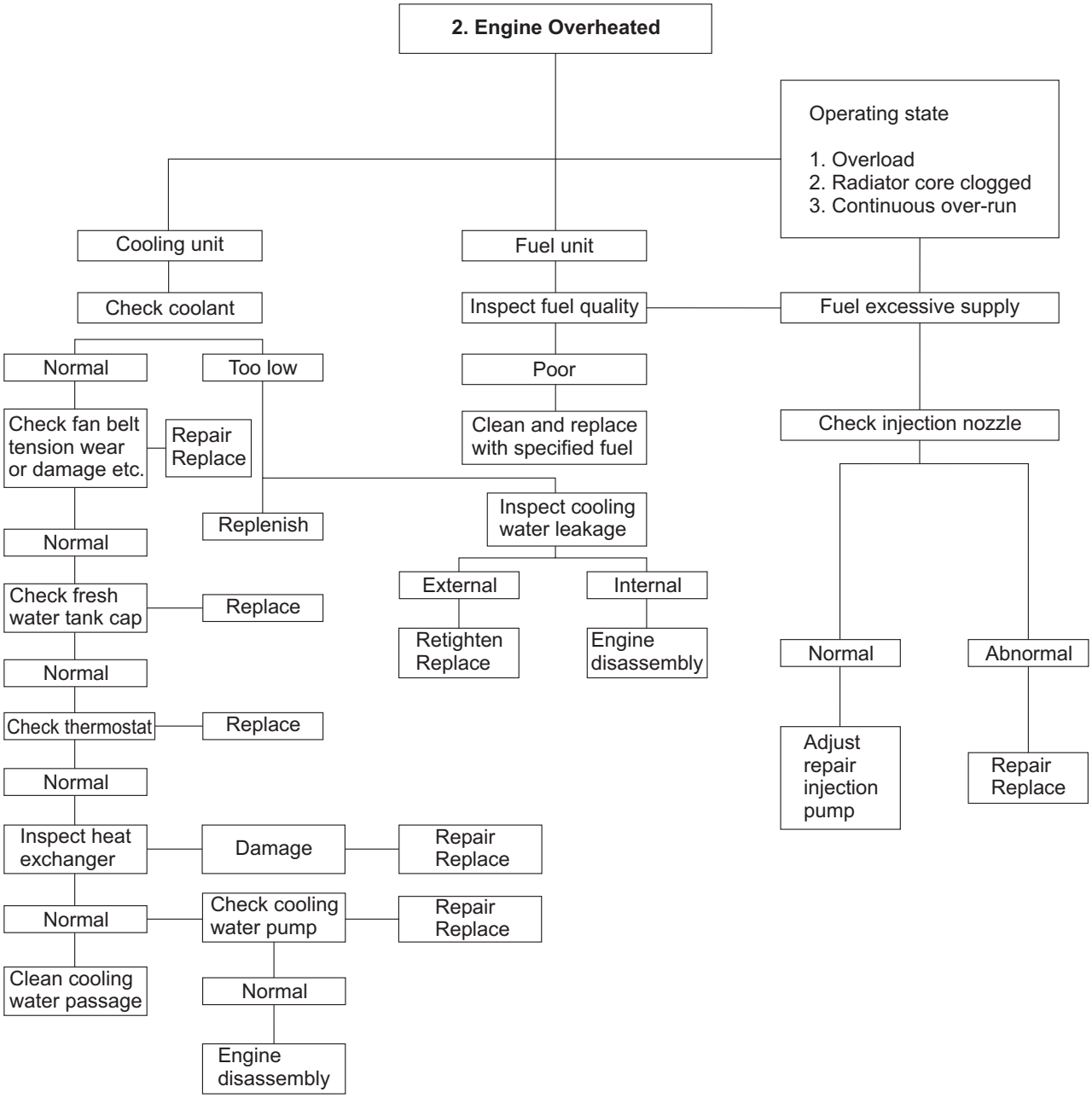
2. Engine Overheated
Operating state
1. Overload
2. Radiator core clogged
3. Continuous over-run
Cooling unit
Fuel unit
Check coolant
Inspect fuel quality
Fuel excessive supply
Normal
Too low
Poor
Check fan belt tension wear or damage etc.
Repair Replace
Clean and replace with specified fuel
Check injection nozzle
Replenish
Inspect cooling water leakage
Normal
External
Internal
Check fresh water tank cap
Replace
Retighten Replace
Engine disassembly
Normal
Abnormal
Normal
Check thermostat
Replace
Adjust repair injection pump
Repair Replace
Normal
Inspect heat exchanger
Damage
Repair Replace
Normal
Check cooling water pump
Repair Replace
Clean cooling water passage
Normal
Engine disassembly

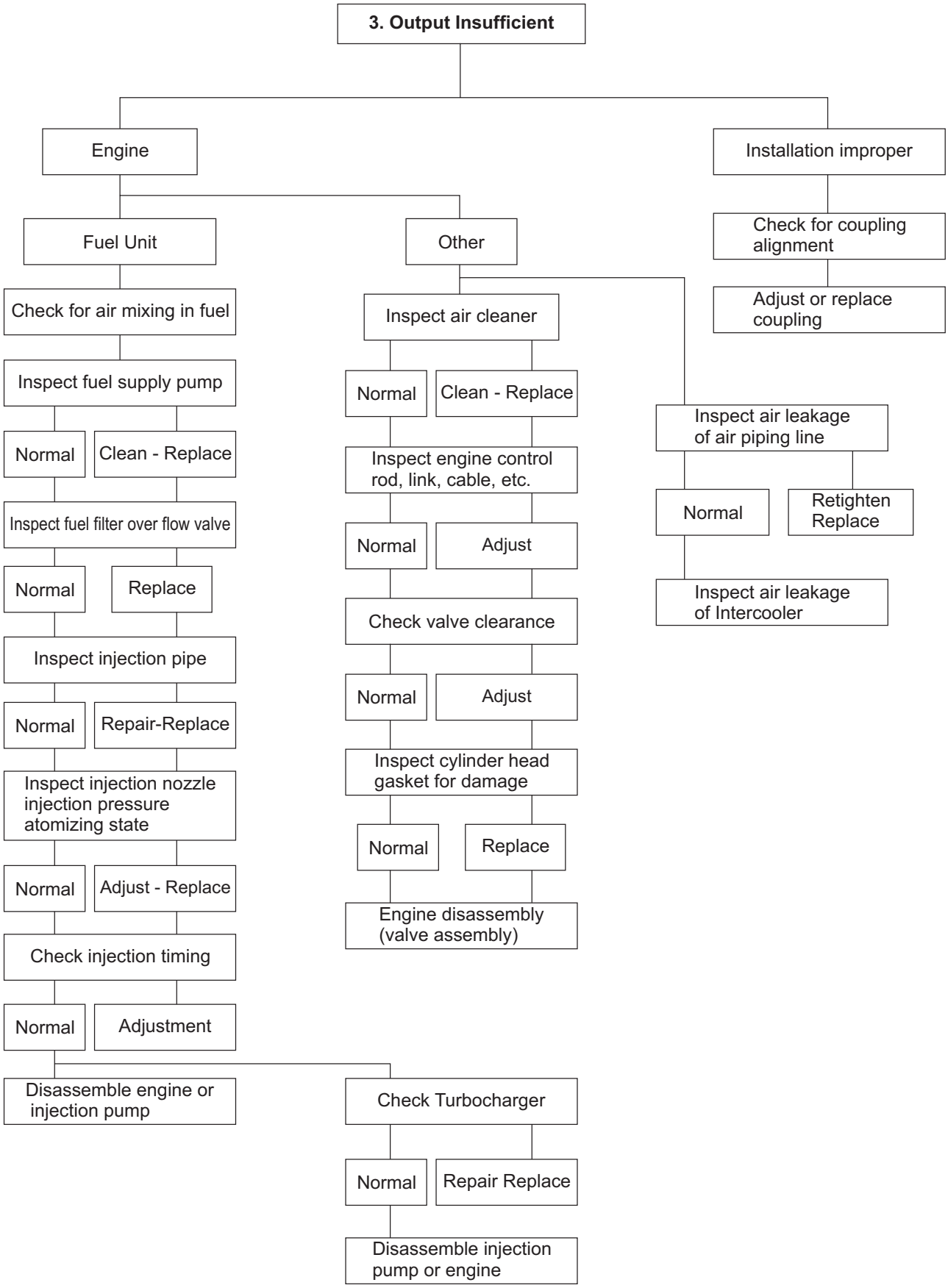
3. Output Insufficient
Engine
Installation improper
Fuel Unit
Other
Check for coupling alignment
Adjust or replace coupling
Check for air mixing in fuel
Inspect air cleaner
Inspect fuel supply pump
Normal
Clean - Replace
Normal
Clean - Replace
Inspect air leakage of air piping line
Inspect engine control rod, link, cable, etc.
Normal
Retighten Replace
Inspect fuel filter over flow valve
Normal
Adjust
Normal
Replace
Inspect air leakage of Intercooler
Check valve clearance
Inspect injection pipe
Normal
Adjust
Normal
Repair-Replace
Inspect cylinder head gasket for damage
Inspect injection nozzle injection pressure atomizing state
Normal
Replace
Normal
Adjust - Replace
Engine disassembly (valve assembly)
Check injection timing
Normal
Adjustment
Disassemble engine or injection pump
Check Turbocharger
Normal
Repair Replace
Disassemble injection pump or engine

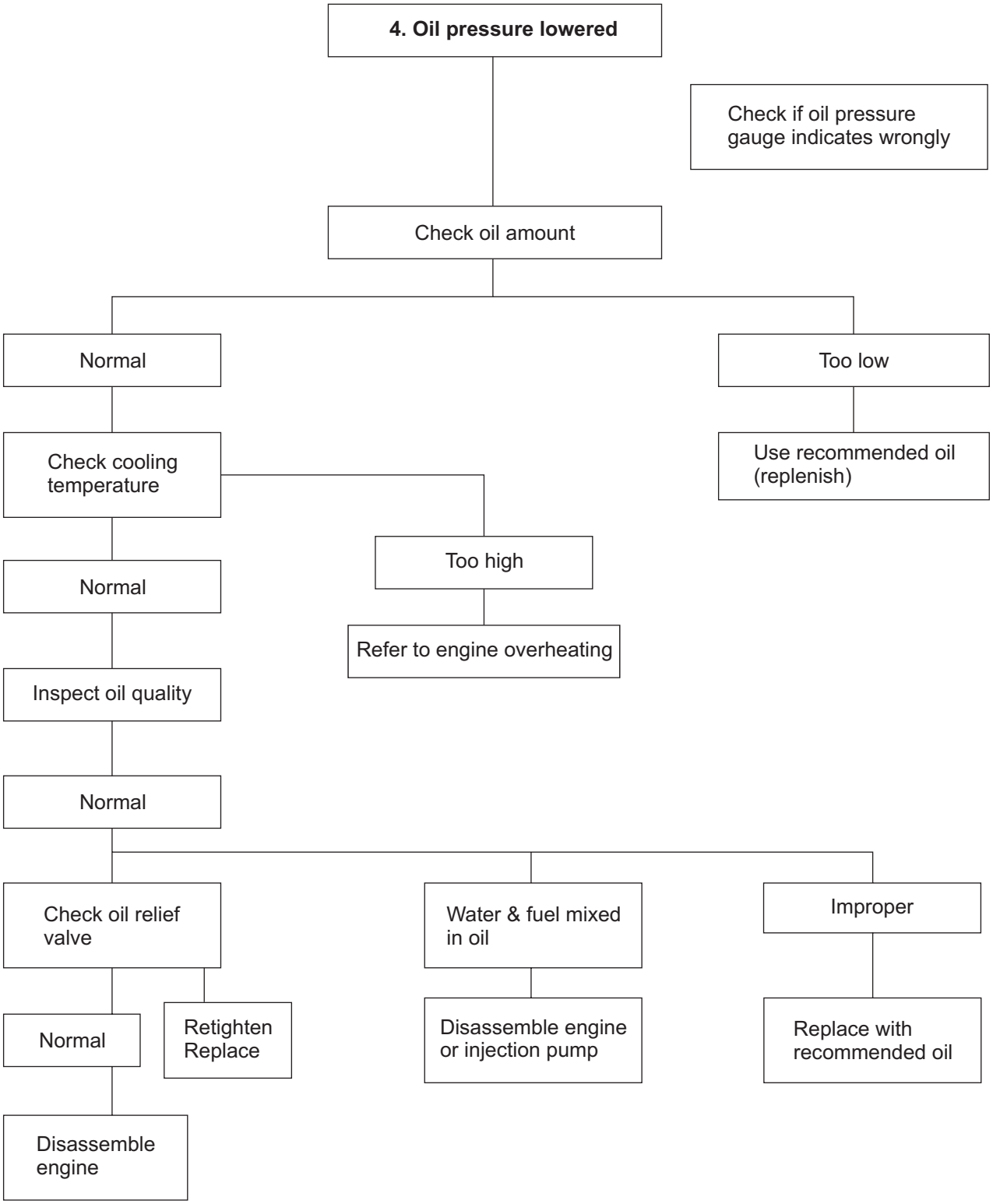
4. Oil pressure lowered
Check if oil pressure gauge indicates wrongly
Check oil amount
Normal
Too low
Check cooling temperature
Use recommended oil (replenish)
Too high
Normal
Refer to engine overheating
Inspect oil quality
Normal
Check oil relief valve
Water & fuel mixed in oil
Improper
Normal
Retighten Replace
Disassemble engine or injection pump
Replace with recommended oil
Disassemble engine

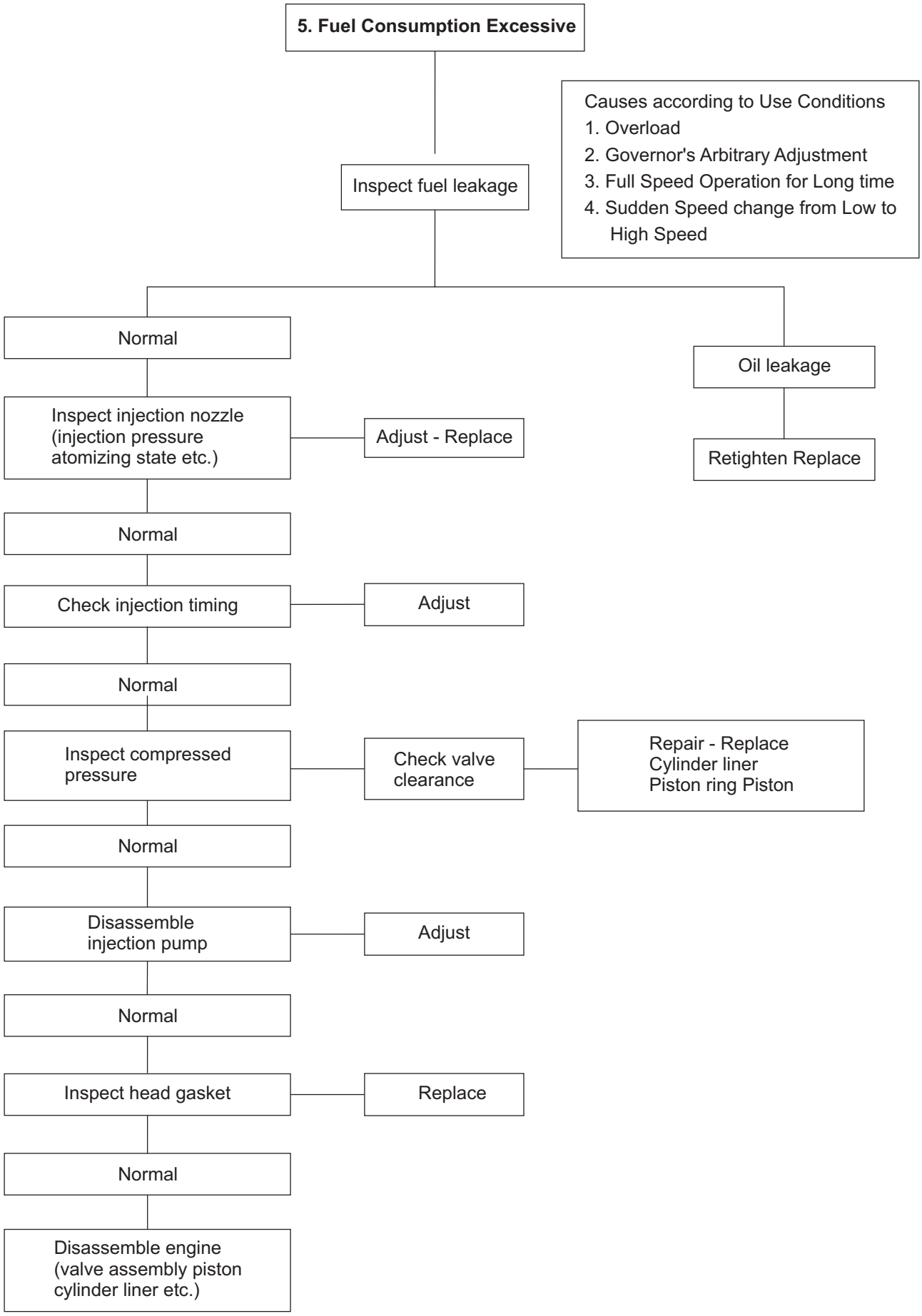
5. Fuel Consumption Excessive
Causes according to Use Conditions
1. Overload
2. Governor's Arbitrary Adjustment
3. Full Speed Operation for Long time
4. Sudden Speed change from Low to High Speed
Inspect fuel leakage
Normal
Oil leakage
Inspect injection nozzle (injection pressure atomizing state etc.)
Adjust - Replace
Retighten Replace
Normal
Check injection timing
Adjust
Normal
Inspect compressed pressure
Check valve clearance
Repair - Replace
Cylinder liner
Piston ring Piston
Normal
Disassemble injection pump
Adjust
Normal
Inspect head gasket
Replace
Normal
Disassemble engine (valve assembly piston cylinder liner etc.)

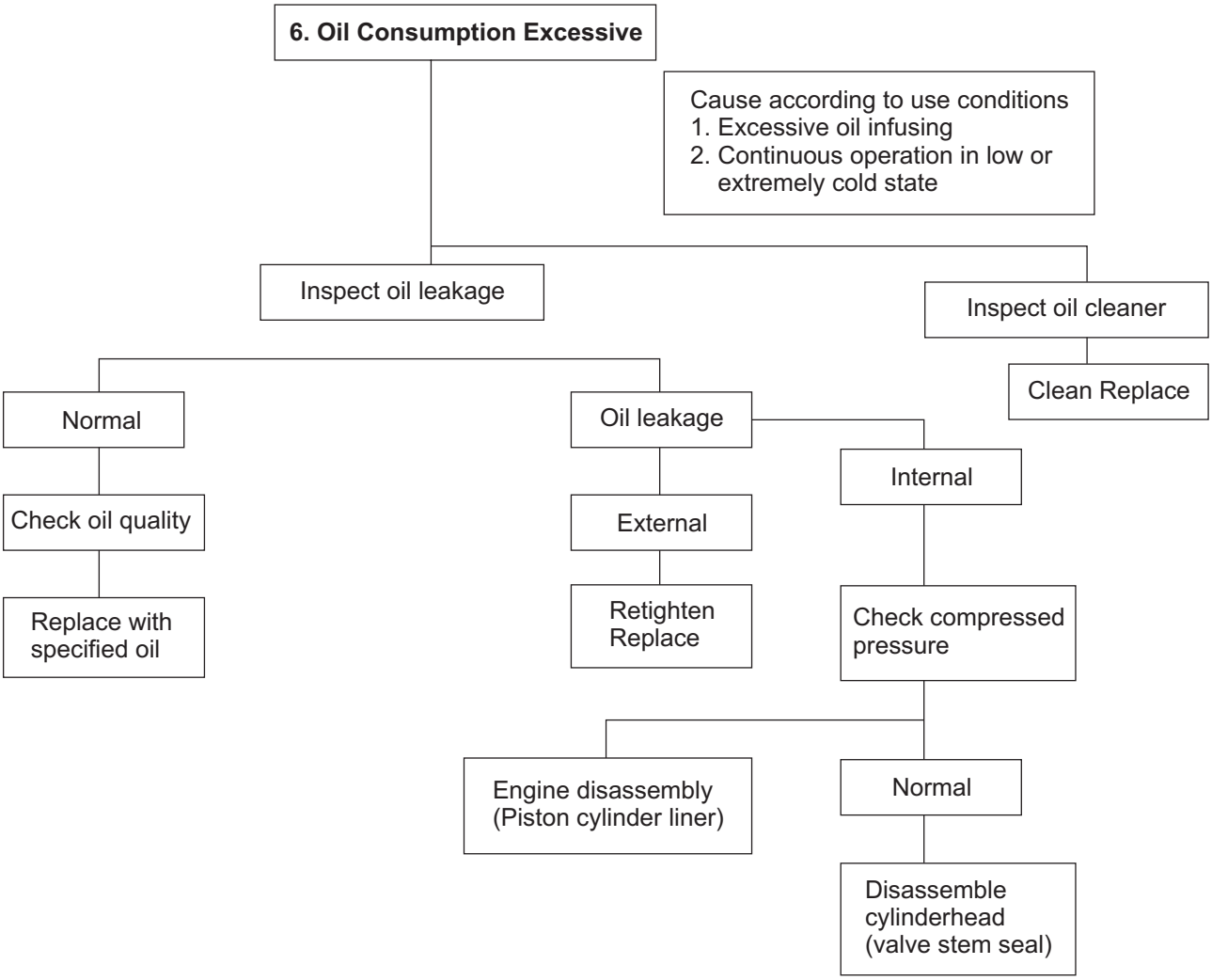
6. Oil Consumption Excessive
Cause according to use conditions
1. Excessive oil infusing
2. Continuous operation in low or extremely cold state
Inspect oil leakage
Inspect oil cleaner
Clean Replace
Normal
Oil leakage
Internal
Check oil quality
External
Replace with specified oil
Retighten Replace
Check compressed pressure
Engine disassembly (Piston cylinder liner)
Normal
Disassemble cylinderhead (valve stem seal)

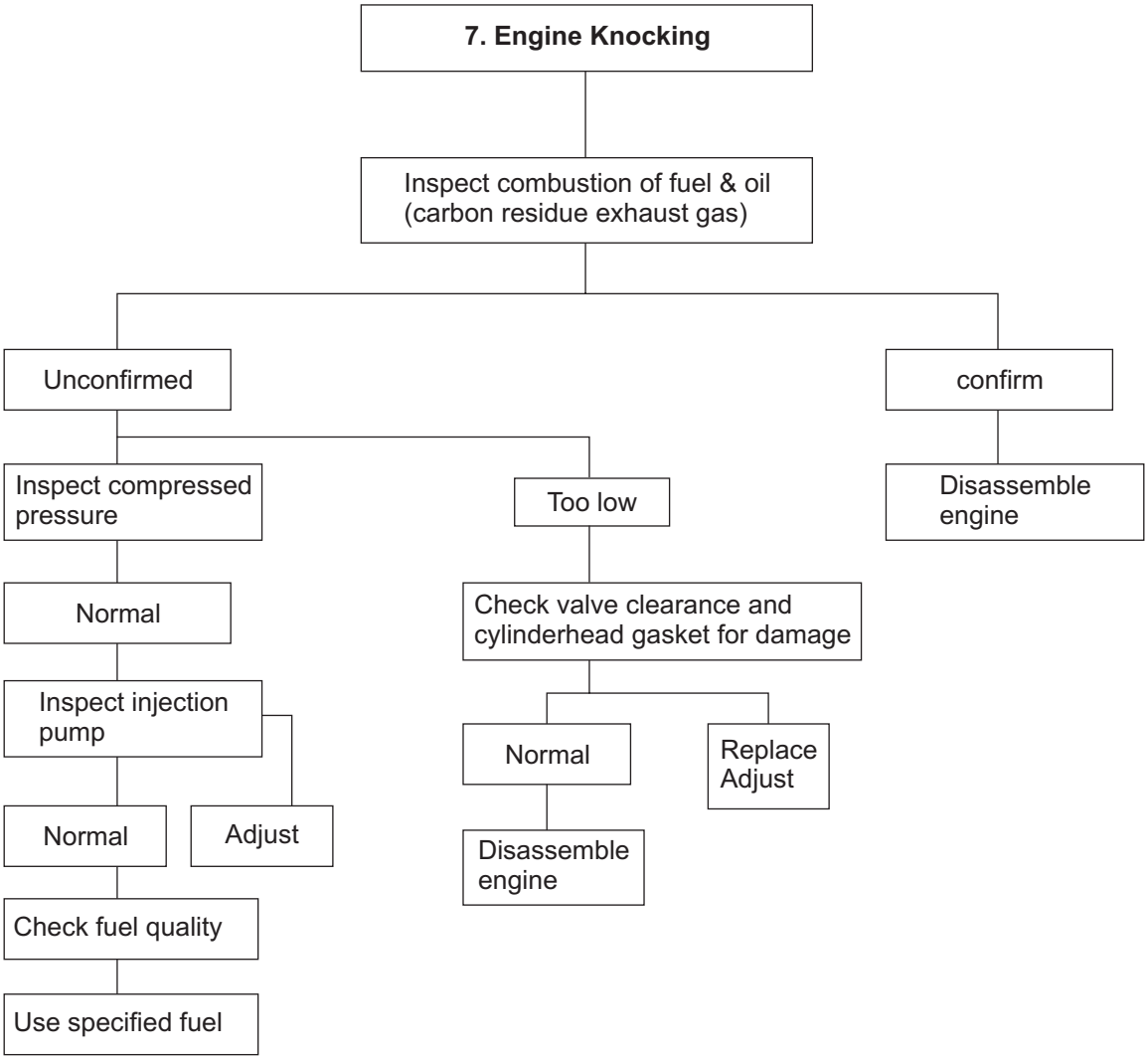
7. Engine Knocking
Inspect combustion of fuel & oil (carbon residue exhaust gas)
Unconfirmed
confirm
Inspect compressed pressure
Too low
Disassemble engine
Normal
Check valve clearance and cylinderhead gasket for damage
Inspect injection pump
Normal
Replace Adjust
Normal
Adjust
Disassemble engine
Check fuel quality
Use specified fuel

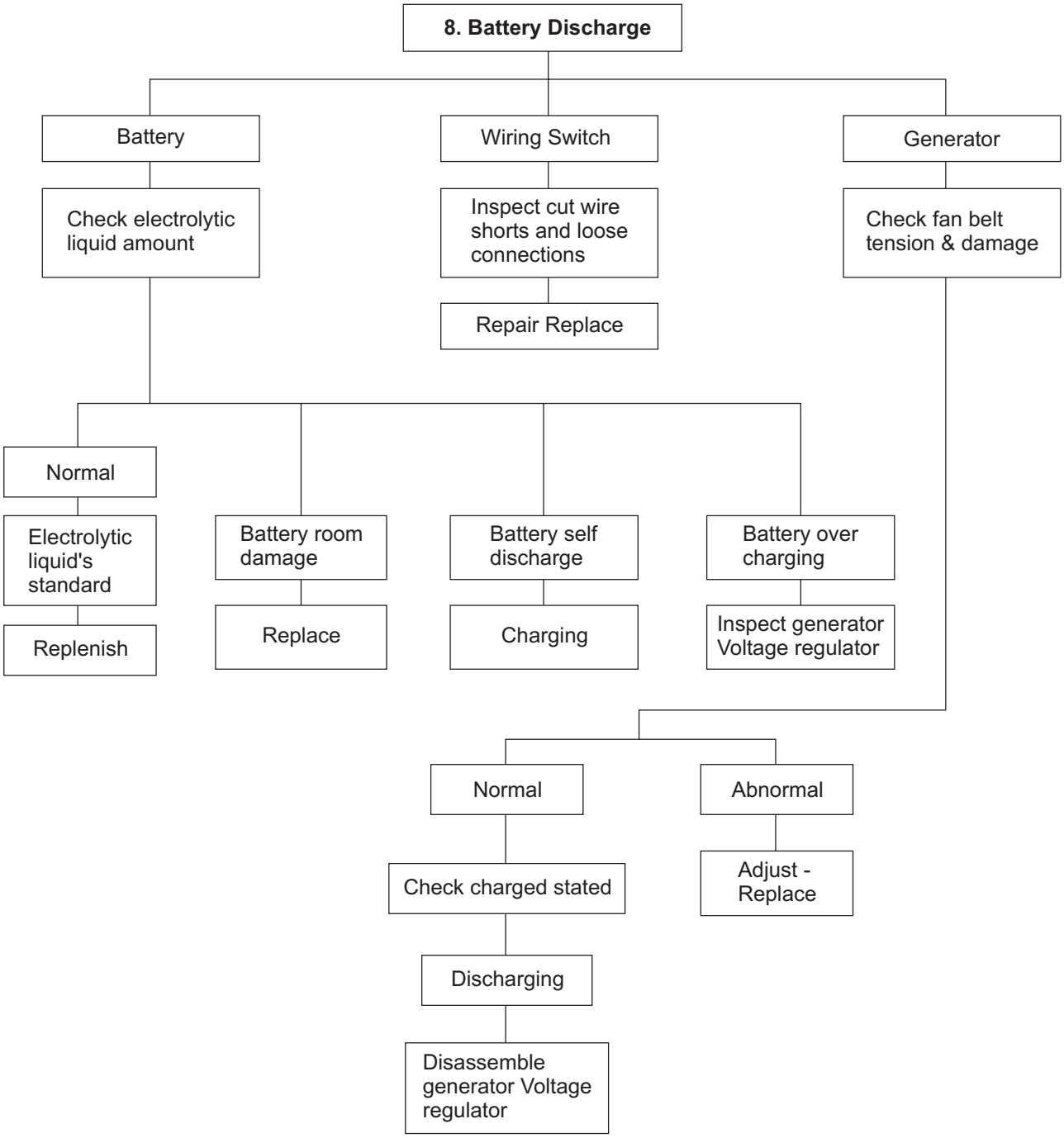
8. Battery Discharge
Battery
Wiring Switch
Generator
Check electrolytic liquid amount
Inspect cut wire shorts and loose connections
Check fan belt tension & damage
Repair Replace
Normal
Electrolytic liquid's standard
Replenish
Battery room damage
Replace
Battery self discharge
Charging
Battery over charging
Inspect generator Voltage regulator
Normal
Abnormal
Check charged stated
Adjust - Replace
Discharging
Disassemble generator Voltage regulator

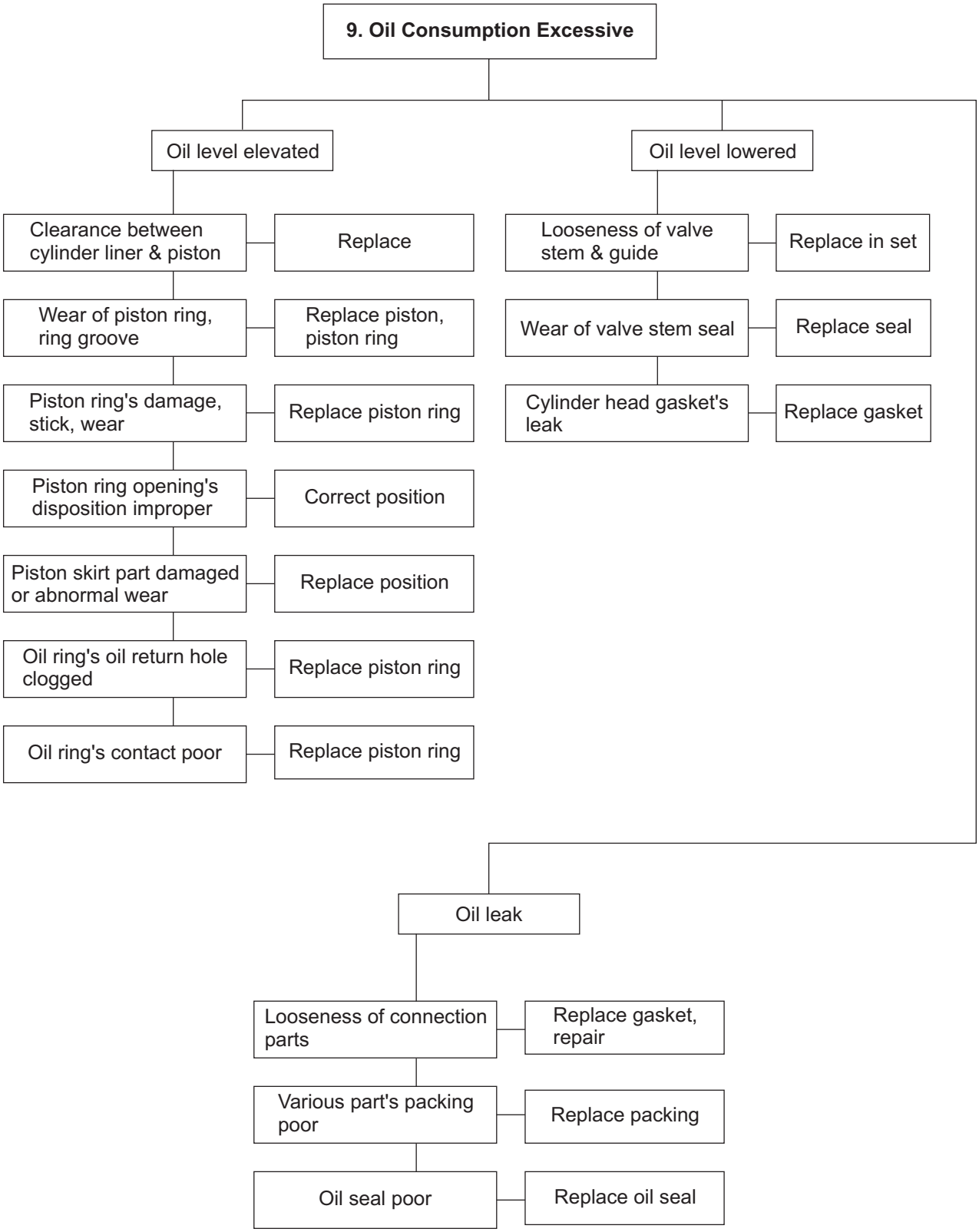
9. Oil Consumption Excessive
Oil level elevated
Oil level lowered
Clearance between cylinder liner & piston
Replace
Wear of piston ring, ring groove
Replace piston, piston ring
Piston ring's damage, stick, wear
Replace piston ring
Piston ring opening's disposition improper
Correct position
Piston skirt part damaged or abnormal wear
Replace position
Oil ring's oil return hole clogged
Replace piston ring
Oil ring's contact poor
Replace piston ring
Looseness of valve stem & guide
Replace in set
Wear of valve stem seal
Replace seal
Cylinder head gasket's leak
Replace gasket
Oil leak
Looseness of connection parts
Replace gasket, repair
Various part's packing poor
Replace packing
Oil seal poor
Replace oil seal

10. Engine noisy

For noises arise compositely such as rotating parts, lapping parts etc., there is necessity to search the cause of noises accurately.

1. Crankshaft

As the wear of bearing or crankshaft progress, the oil clearances increase.	Replace bearing & grind crankshaft
Lopsided wear of crankshaft	Grind or replace
Oil supply insufficient due to oil passage clogging	Clean oil passage
Stuck bearing	Replace bearing & Grind

2. Con rod and Con rod bearing

Lopsided wear of con rod bearing	Replace bearing
Lopsided wear of crank pin	Grind crankshaft
Connecting rod distortion	Repair or replace
Stuck bearing	Replace & grind crankshaft
Oil supply insufficiency as clogging at oil passage progresses	Clean oil passage

----- Continued

10. Engine noisy

For noises arise compositely such as rotating parts, lapping parts etc., there is necessity to search the cause of noises accurately.

3. Piston, piston pin & piston ring

Piston clearance increase as the wear of piston and piston ring progresses.	Replace piston & piston ring
Wear of piston or piston pin	Replace
Piston stuck	Replace piston
Piston insertion poor	Replace piston
Piston ring damaged	Replace piston

4. Others

Wear of crankshaft, thrust bearing	Replace thrust
Camshaft end play increased	Replace thrust plate
Idle gear end play increased	Replace thrust washer
Timing gear backlash excessive	Repair or replace
Valve clearance excessive	Adjust valve clearance
Abnormal wear of tappet, cam	Replace tappet, cam
Supercharger inner part damaged	Repair or replace

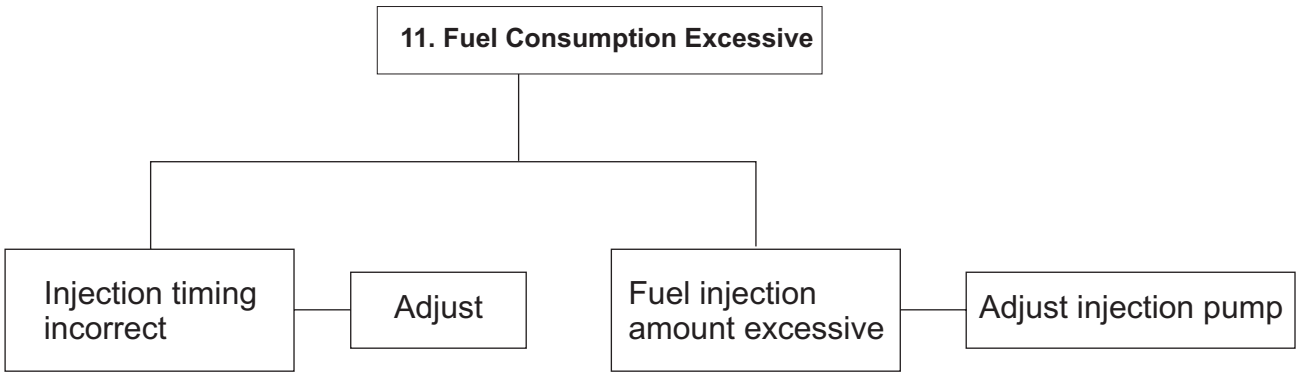
11. Fuel Consumption Excessive
Injection timing incorrect
Adjust
Fuel injection amount excessive
Adjust injection pump

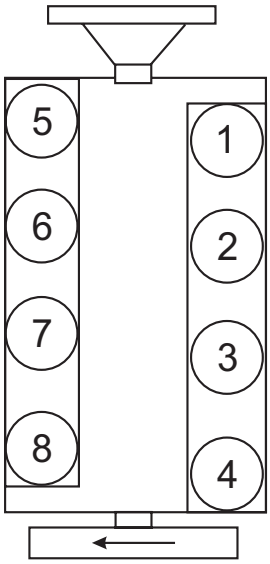

8 Cylinder V : Firing Order
1 - 5 - 7 - 2 - 6 - 3 - 4 - 8

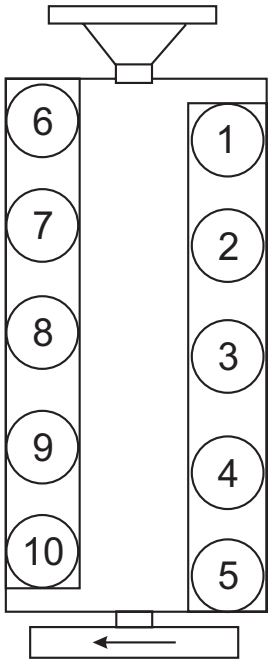

10 Cylinder V – Firing Order
1 - 6 - 5 - 10 - 2 - 7 - 3 - 8 - 4 - 9

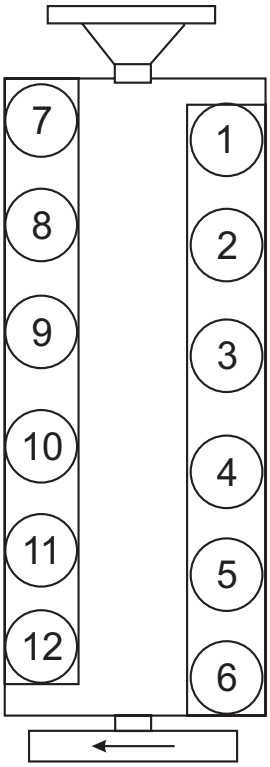

12 Cylinder V – Firing Order
1 - 12 - 5 - 8 - 3 - 10 - 6 - 7 - 2 - 11 - 4 - 9

KIRLOSKAR OIL ENGINES LIMITED
13, LAXMANRAO KIRLOSKAR ROAD
KHADKI, PUNE - 411 003, INDIA.
HELPDESK - 1800 2333344, 020-66084608
HELPDESK ID - helpdesk@koel.co.in

Part No. DV0.066.02.0.00
June 2009